Assembly Instructions

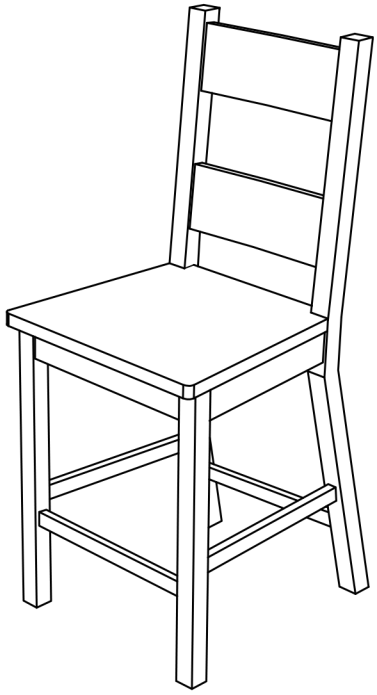

ASSEMBLY RATING

The Assembly Rating is a 5-point system that shows the degree of effort needed in assembling a specific product (with 1 being easy and 5 being difficult). For some products, two persons are recommended.

EASY 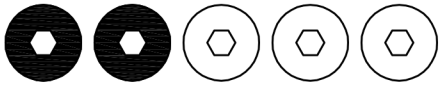 DIFFICULT

Tools Required For Assembly:

Allen Wrench 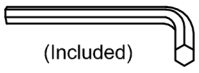
(Included)

Phillips Screwdriver 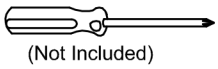
(Not Included)

2 PERSONS RECOMMENDED

Rev: 18-07-13

ASSEMBLY & CARE ADVICE

FOR YOUR FURNITURE TO LAST,CORRECT ASSEMBLY AND PROPER MAINTENANCE ARE NECESSARY.
PLEASE FOLLOW THE INFORMATION PROVIDED BELOW TO FULLY ENJOY YOUR FURNITURE.

BASIC ASSEMBLY TECHNIQUES

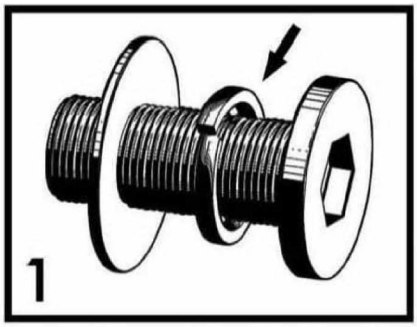

When lock or spring washer is used in an assembly, please make sure the lock or spring washer is placed between the larger flat washer and the head of the screw or bolt.

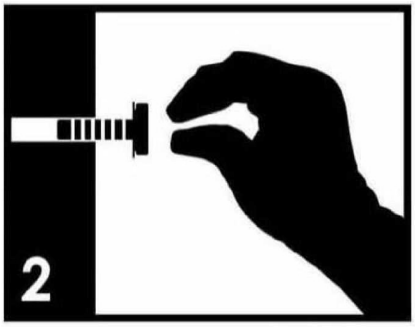

Position each part correctly and insert screws or bolts into their respective holes by hand tighten or using the proper hand tool. Only tighten when step is completed or when instructed to do so.

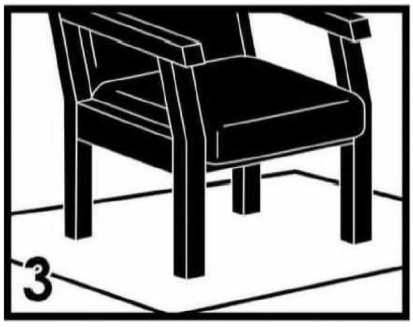

Use cardboard or carpet area when assembling furniture to prevent scratches .Make sure the furniture rests on a flat and level surface with each leg evenly touching the floor. No dragging of products/parts.

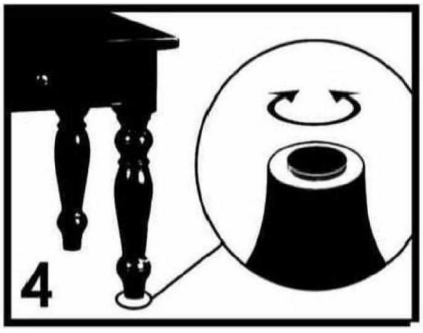

Some furniture comes with height adjustment knobs underneath each leg. To lower or to raise each leg, you need to turn clockwise or counterclockwise, respectively.

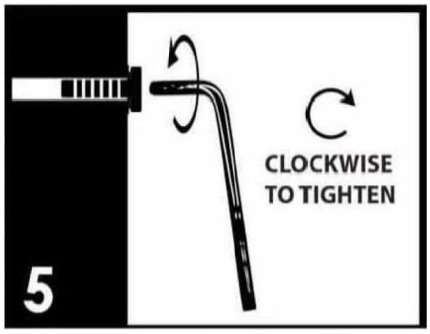

Make sure all parts are properly aligned, then use the appropriate hand tool to completely tighten the bolts or screws. Do not use power tools and do not overtighten.

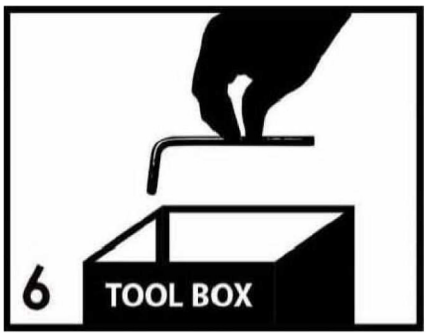

Save the instructions and store the Allen wrench or any supplied tool for later maintenance. After two weeks, check and tighten any loose hardware and repeat again every six months thereafter.

IT IS THE USER'S RESPONSIBILITY TO MAINTAIN THE FURNITURE.THE HARDWARE MAY LOOSEN OVER TIME AND MAY CAUSE THE FURNITURE TO BE WOBBLY AND UNABLE TO SUPPORT ITS INTENDED WEIGHT CAPACITY. THIS MAY LEAD TO COLLAPSE AND MAY CAUSE SERIOUS INJURY.

FAILURE TO FOLLOW THE GUIDELINES ABOVE MAY RESULT IN INJURY AND/OR PROPERTY DAMAGE.

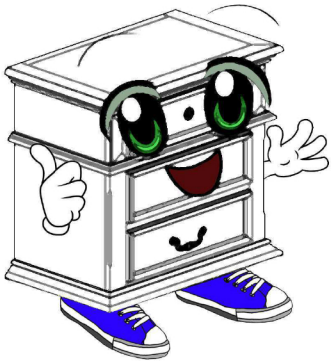

Before you begin, please read Page 2 of "Assembly and Care Advice".

And remember, do not tighten until each step is completed or instructed.

Parts List

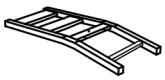

#1 x 1pc
Chair Back Frame

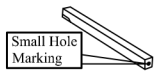

#2 x 1pc
Right Front Leg

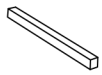

#3 x 1pc
Left Front Leg

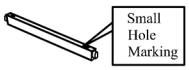

#4 x 1pc
Right Side Stretcher

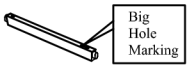

#5 x 1pc
Left Side Stretcher

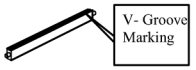

#6 x 1pc
Front Stretcher

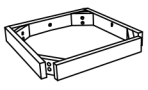

#7 x 1pc
Box Seat

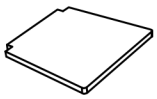

#8 x 1pc
Wooden Seat

#A x 6pcs
Csk Screw M4 x 32mm

#B x 6pcs
Csk Screw M4 x 35mm

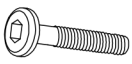

#C x 1pc
Bolt 1/4" x 1-3/8"

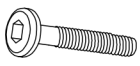

#D x 2pcs
Bolt 1/4" x 2-3/8"

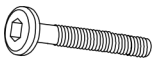

#E x 4pcs
Bolt 1/4" x 2-3/4"

#F x 7pcs
Lock Washer M6

#G x 7pcs
Flat Washer M6 x 19MM

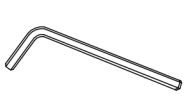

#H x 1pc
ALLEN KEY with ball m4

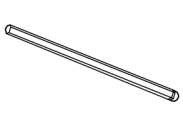

I x 1pc (extra)
I-Key with ball m4

#C x 1pc
#E x 4pcs
#F x 5pcs
#G x 5pcs

DO NOT FULLY TIGHTEN ALL BOLTS UNTIL FULL ASSEMBLY OF PRODUCT IS COMPLETED.

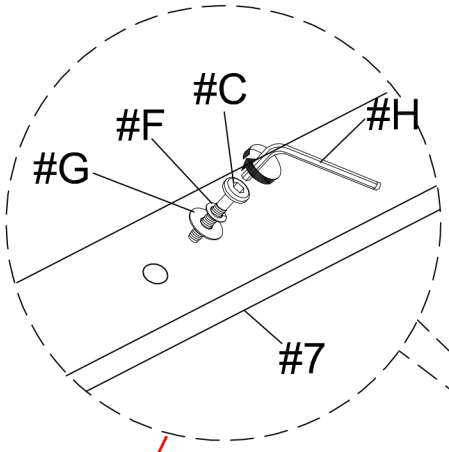

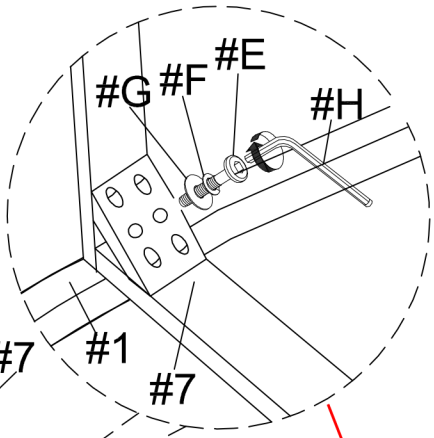

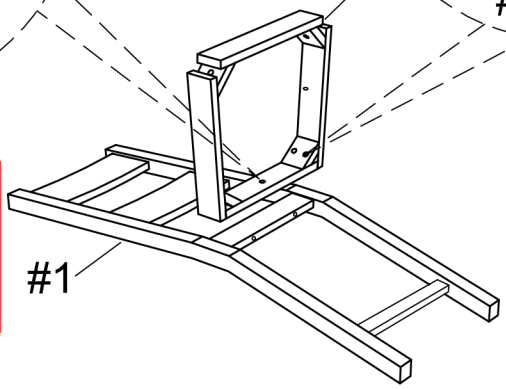

1) Align box seat (#7) to the chair back (#1). Secure middle hole of seat (#7) to chair back (#1) by using bolts (#C) with washers (#F,G).

2) Secure corner holes of the seat (#7) to chair back (#1) by using bolts (#E) with washers (#F,G).

PLACE CHAIR ONTO A TABLE UPSIDE DOWN

#A x 3pcs
#D x 1pc
#F x 1pc
#G x 1pc

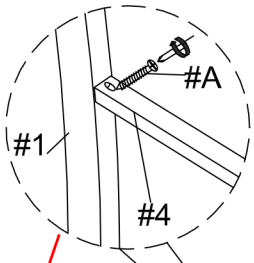

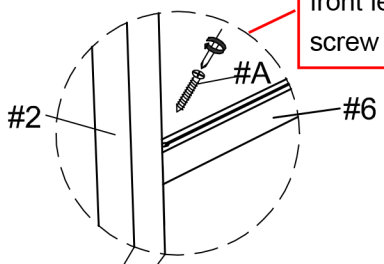

3) Align front stretcher (#6) to the front leg (#2), then secure by using screw (#A).

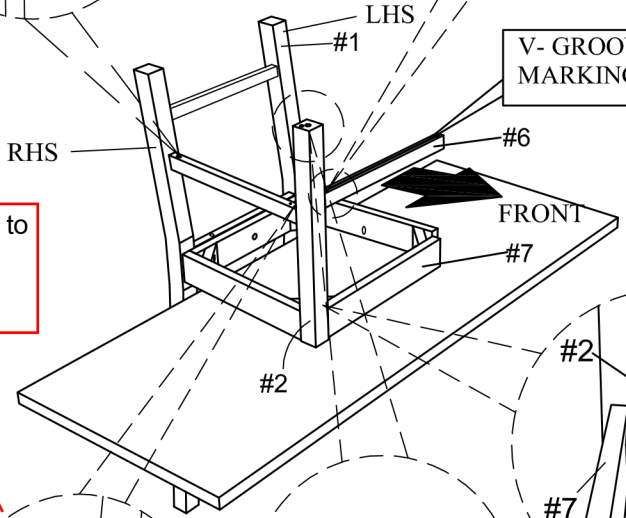

2) Align right side stretcher (#4) to the gaps of the chair legs, then secure by using screws (#A).

1) Align right front leg (#2) to the seat, then loosely secure by using bolts (#D) with washers (#F,G).

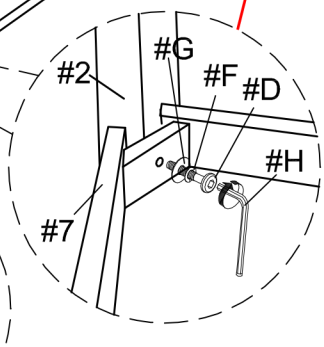

Small Hole Marking

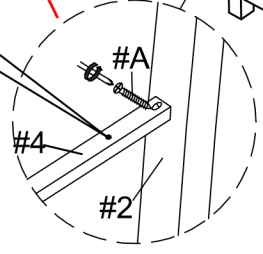

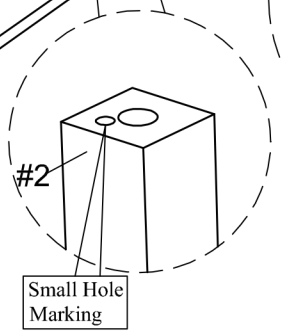

3) Align left side stretcher (#5) to the gaps of the legs, then secure by using screws (#A).

Big Hole Marking

2) Secure front stretcher (#6) to front leg (#3) by using screw (#A).

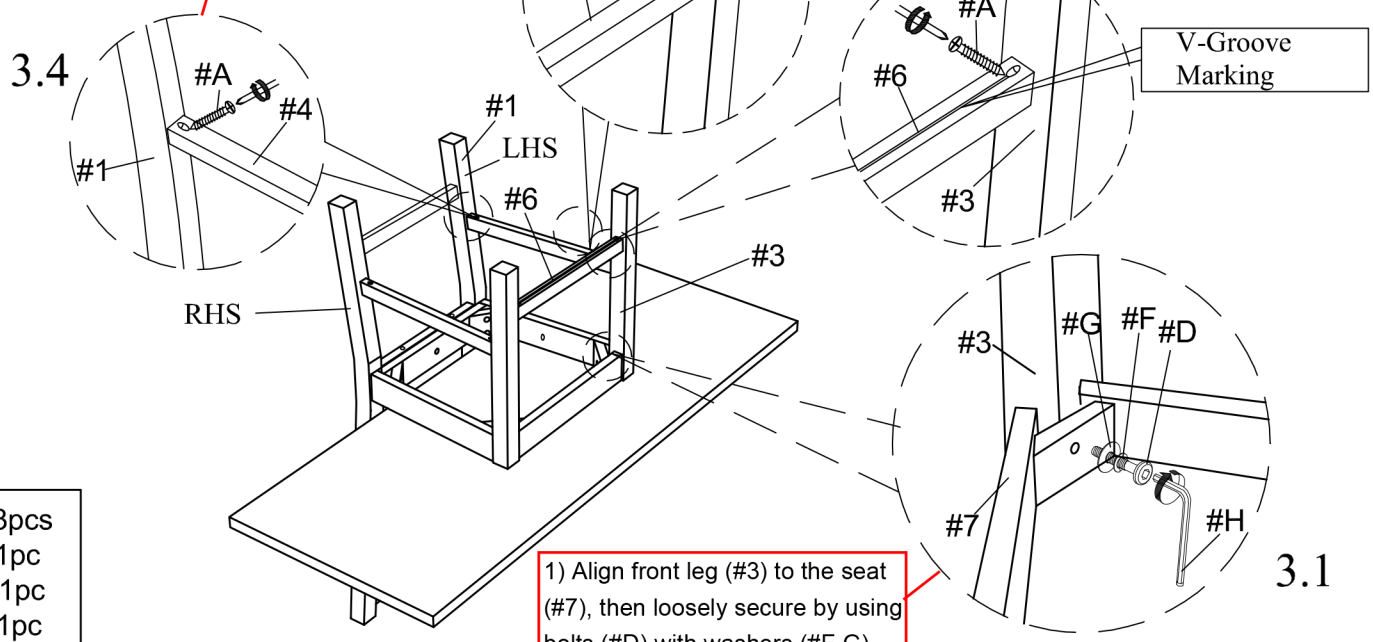

#A x 3pcs
#D x 1pc
#F x 1pc
#G x 1pc

1) Align front leg (#3) to the seat (#7), then loosely secure by using bolts (#D) with washers (#F,G).

#B x 6pcs

Align wooden seat (#8) to the chair frame, then secure by using screws (#B).

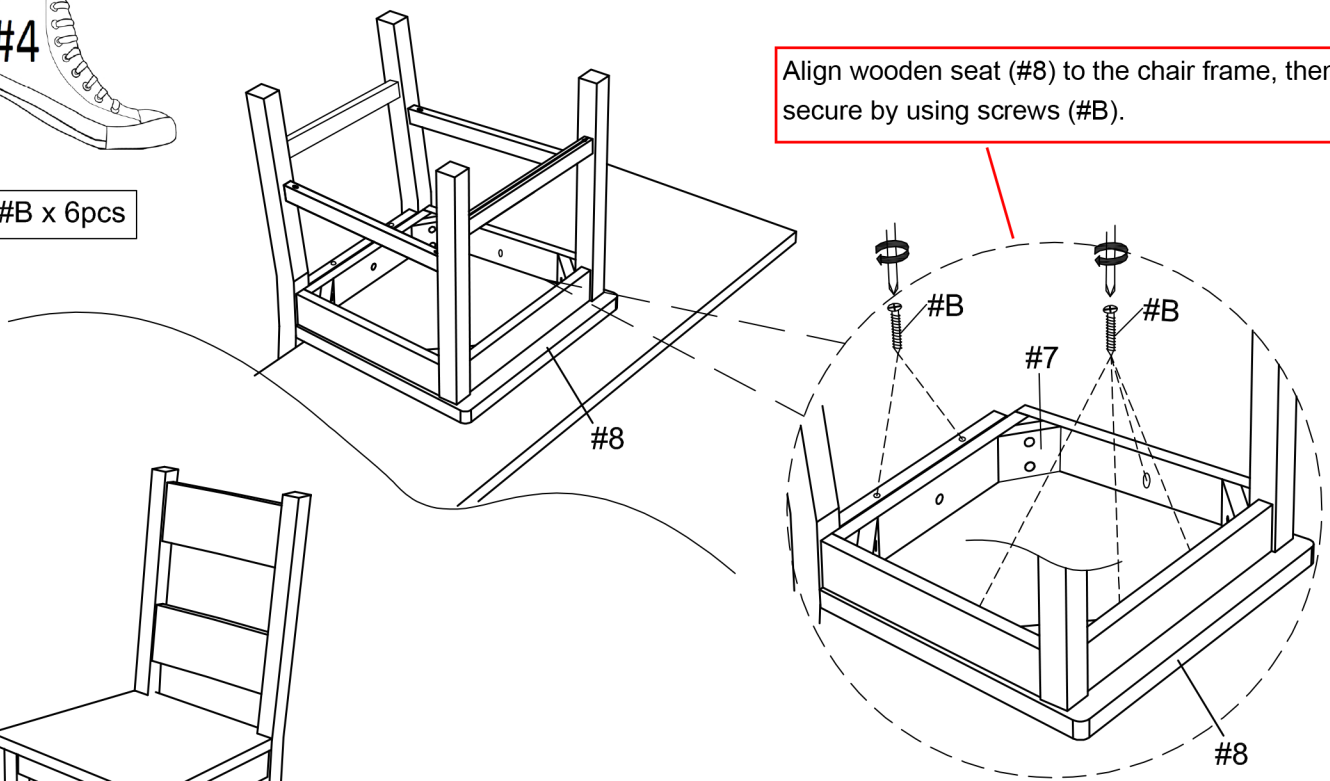

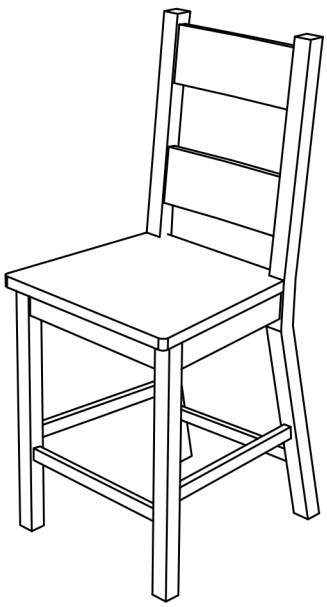

X2