ID USA FURNITURE DISTRIBUTOR
CONTEMPORARY • FUNCTIONAL • COMPETITIVE

ITEM NO. 151337-151338 DESK COMPARTMENT SPECIFICATIONS

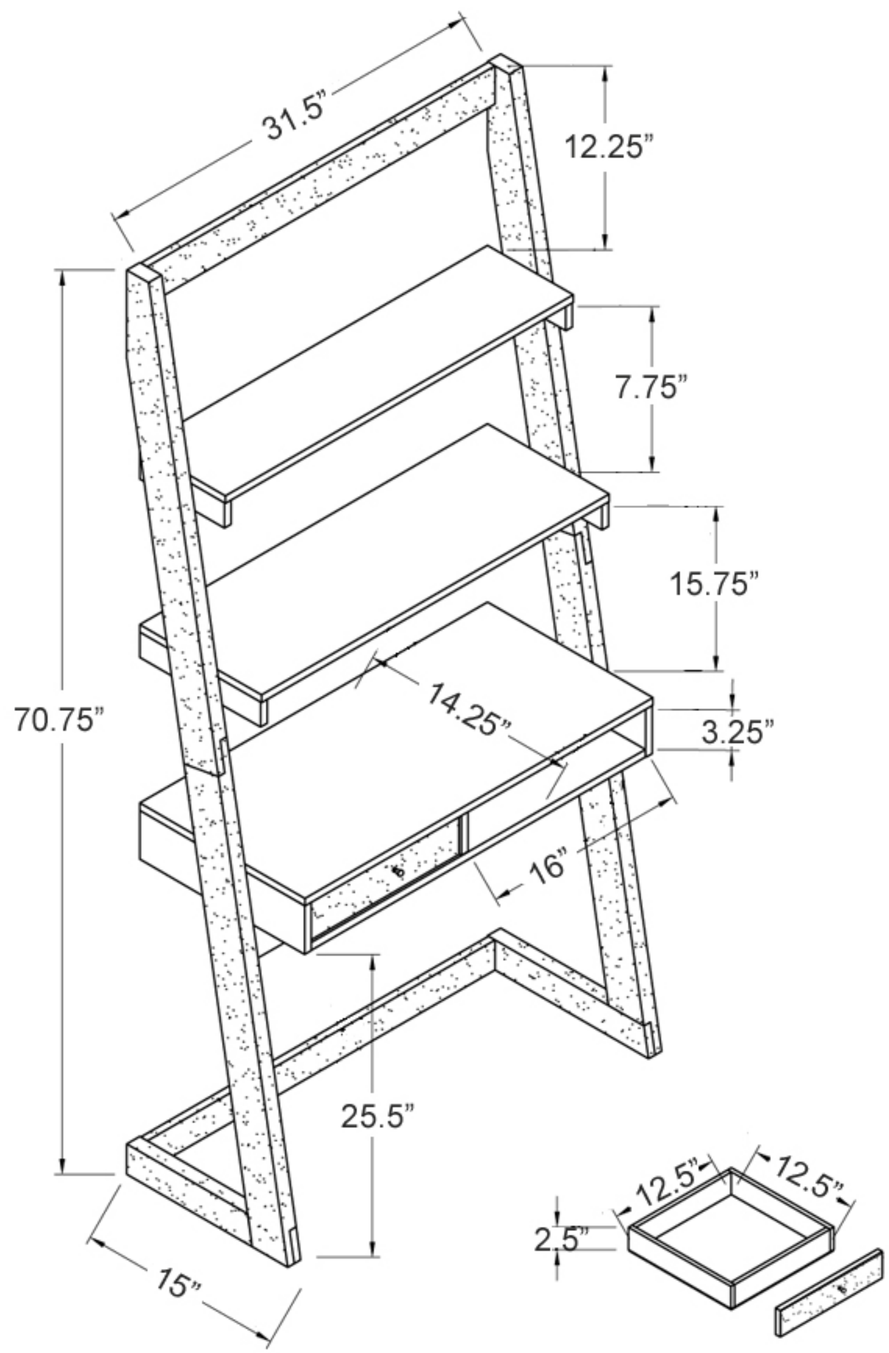

ALL MEASUREMENTS ARE APPROXIMATE
05/2016