# ASSEMBLY INSTRUCTIONS

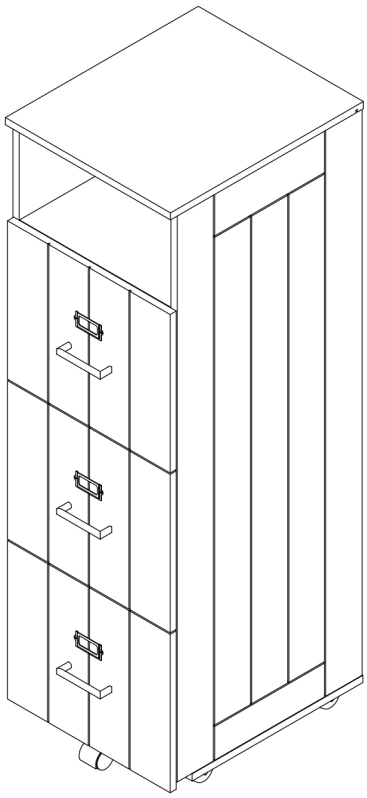

## TOOLS REQUIRED

**Philips Screwdriver**

(Not Included)

**2 - People Recommended**

## ASSEMBLY RATING

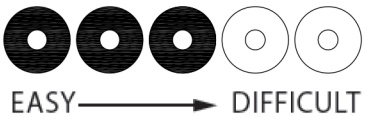


The Assembly Rating is a 5-point system showing the level of effort needed to assemble a specific product.

VERSION **# 20-05-13**

# CHECK BEFORE STARTING

- [ ] **Are you missing anything?**

  Double-check all parts, hardware and accessories listed on Page 6 are accounted for.

- [ ] **Should we send any replacements?**

  Are there any irregularities or flaws in the parts? We can send replacements!

- [ ] **Check out our Quick Tips!**

  We recommend reviewing the pre-assembly handouts. Even experts need a refresher now and then!

- [ ] **Prep Time!**

  Please review the assembly instructions and all diagrams prior to assembling. Arrange parts as recommended on Page 7 and group identical hardware together to make assembling easier.

# PRE ASSEMBLY INTRODUCTION

We understand building ready-to-assemble furniture can be a challenging experience for some.  To help avoid confusion, we have provided some helpful tips that may speed up the process.

### Teamwork

ALWAYS have at least two people to help with transporting and assembling the product to avoid potential injury and/or damage.

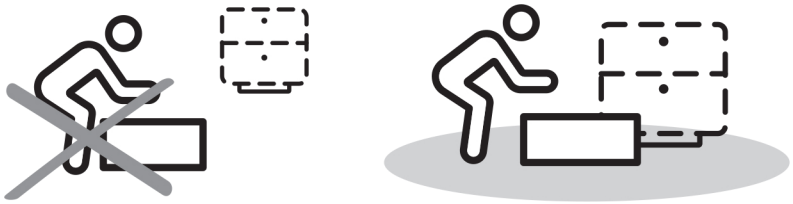

### Suitable Location

Assembling near the area of the intended location is highly recommended.

### Sufficient Space

Make sure you have enough space to move around during the assembly.

### Avoid Scratches

Use cardboard, blankets or a carpeted area while assembling furniture to prevent scratches.

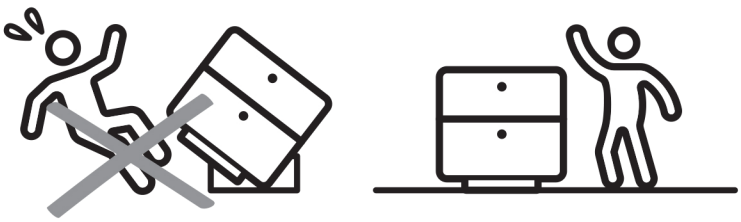

### Flat Surface

Make sure the furniture rests on a flat and level surface with each leg evenly touching the floor.

# ASSEMBLY AND CARE ADVICE

**FAILURE TO FOLLOW THE GUIDELINES BELOW MAY RESULT IN INJURY AND/OR PROPERTY DAMAGE.**

Position each part correctly and insert screws or bolts into their respective holes.

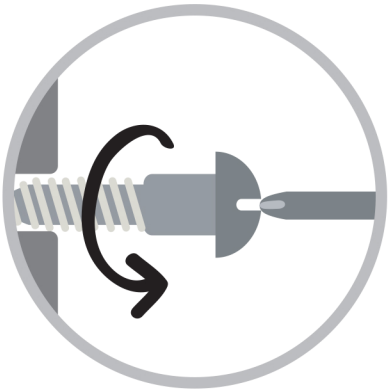

Turn clockwise to tighten and only tighten when step is completed or when instructed to do so.

Use the appropriate hand tools or power tools for assembly. Select steps, such as tightening screws and/or bolts, may require hand tools to avoid causing damage during assembly.

Save the instructions and store any supplied tools for later maintenance.

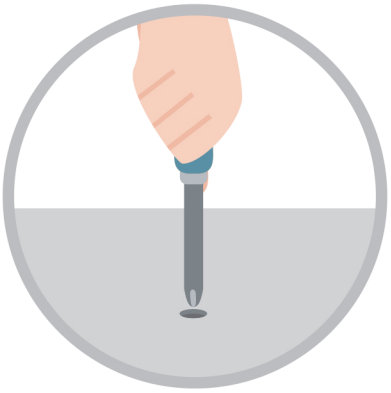

After two weeks, check and tighten any loose hardware and repeat again every six months thereafter.

**IT IS THE USER'S RESPONSIBILITY TO MAINTAIN THE FURNITURE. THE HARDWARE MAY LOOSEN OVER TIME AND MAY CAUSE THE FURNITURE TO BE WOBBLY AND UNABLE TO SUPPORT ITS INTENDED WEIGHT CAPACITY. THIS MAY LEAD TO COLLAPSE AND MAY CAUSE SERIOUS INJURY.**

# CAM LOCK FASTENER ASSEMBLY INSTRUCTIONS

**Note :**
Every cam lock bolt must have a cam lock connector in order to fasten the parts together.

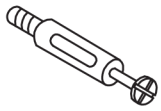
cam bolt

cam lock

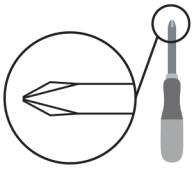
screwdriver

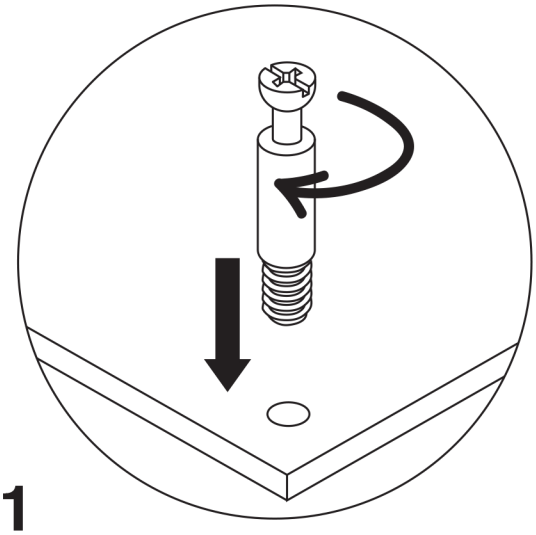

**1**

Screw the cam bolt into panel.

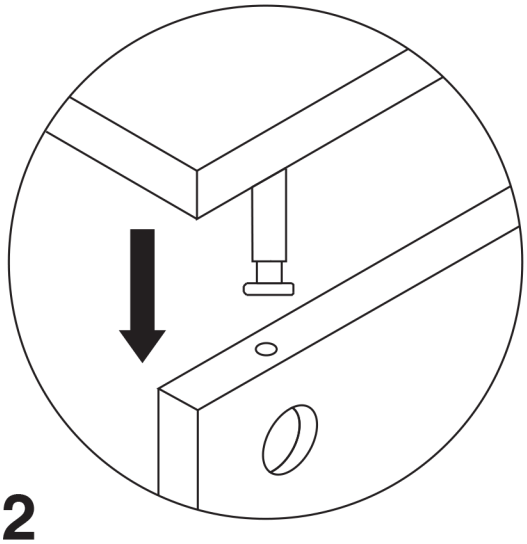

**2**

Insert the cam bolt into the bolt hole of joint panel.

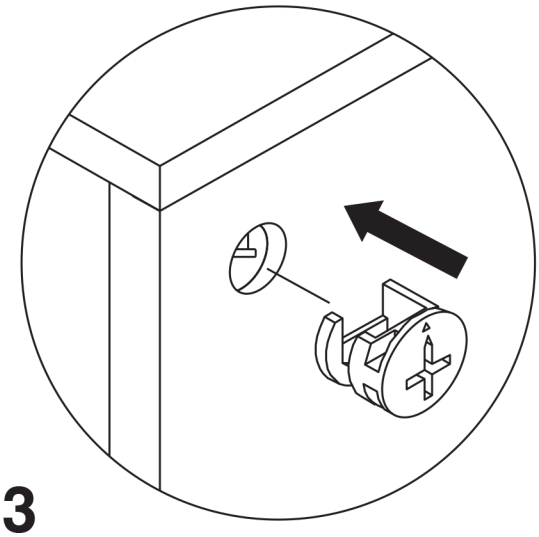

**3**

Align the cam lock with its side opening (or arrow) pointing to cam bolt.

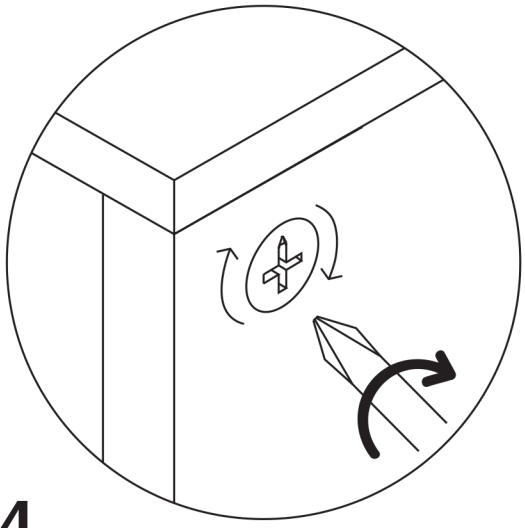

**4**

Turn the cam lock clockwise gently until it will not turn any more.

# FILE CABINET

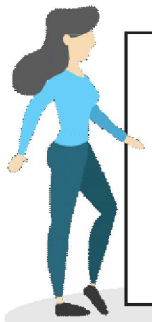

- Please keep instructions for future reference.
- Check the quantity and irregularity of parts and hardware before you start.

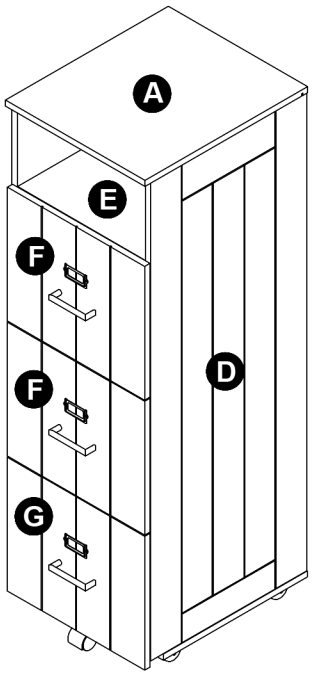


## PARTS

A 1PC

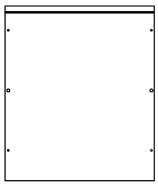

B 1PC

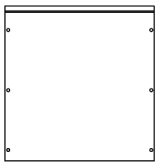

C 1PC

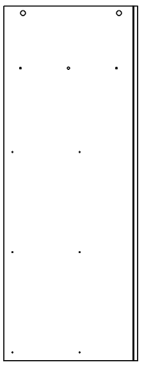

D 1PC

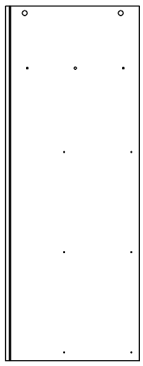

E 1PC

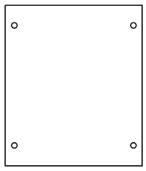

F 2PCS

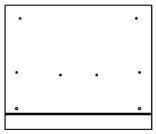

G 1PC

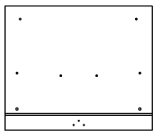

H 3PCS

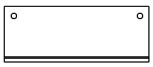

I 3PCS

J 3PCS

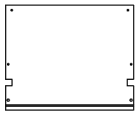

K 3PCS

L 1PC

## HARDWARE

1 20PCS

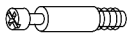

2 8PCS (ø15x12)

3 12PCS (ø15x9)

4 4PCS

5 6PCS (8x30)

6 12PCS (6x30)

7 6PCS

8 18PCS

9 4SETS

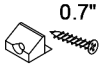


10 6PCS

## ACCESSORIES

A1 1PC

A2 2PCS (Lock)

A3 2PCS

A4 1SET

A5 1PC

A6 19PCS

A7 3SETS

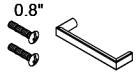


A8 3SETS

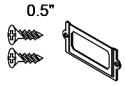


A9 6PCS

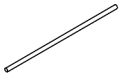

A10 4PCS

A11 2SETS

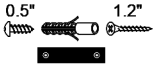

# GET READY

Please group boards as below.

H 3PCS I 3PCS J 3PCS K 3PCS G 1PC F 2PCS

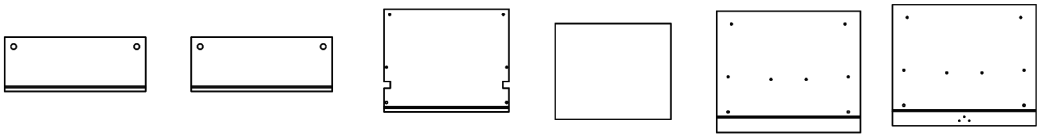

**Drawer**

C 1PC D 1PC E 1PC

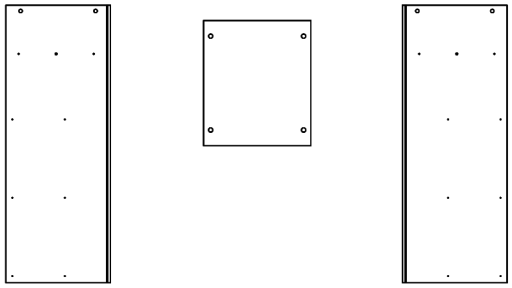

B 1PC L 1PC A 1PC

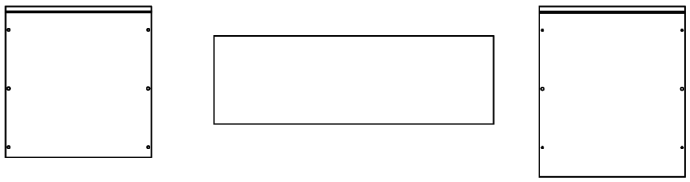

**Body**

# ASSEMBLY INSTRUCTIONS

## 1

Hardware ① x 12 pcs
Hardware ⑥ x 12 pcs (6x30)
Accessory A7 x 3 sets

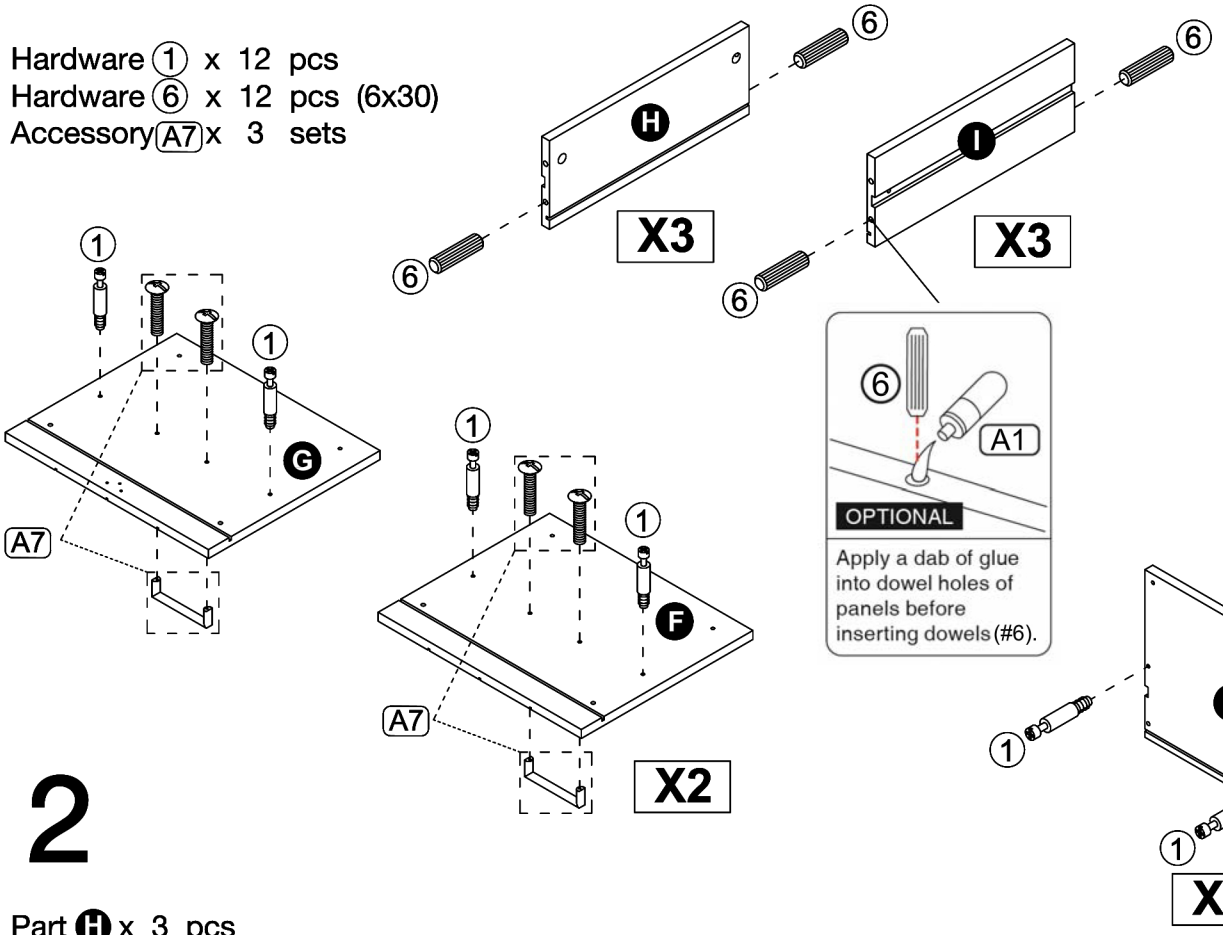


## 2

Part H x 3 pcs
Part I x 3 pcs
Part J x 3 pcs
Hardware ③ x 6 pcs
Accessory A4 x 1 pc
Accessory A5 x 1 pc
Accessory A6 x 3 pcs

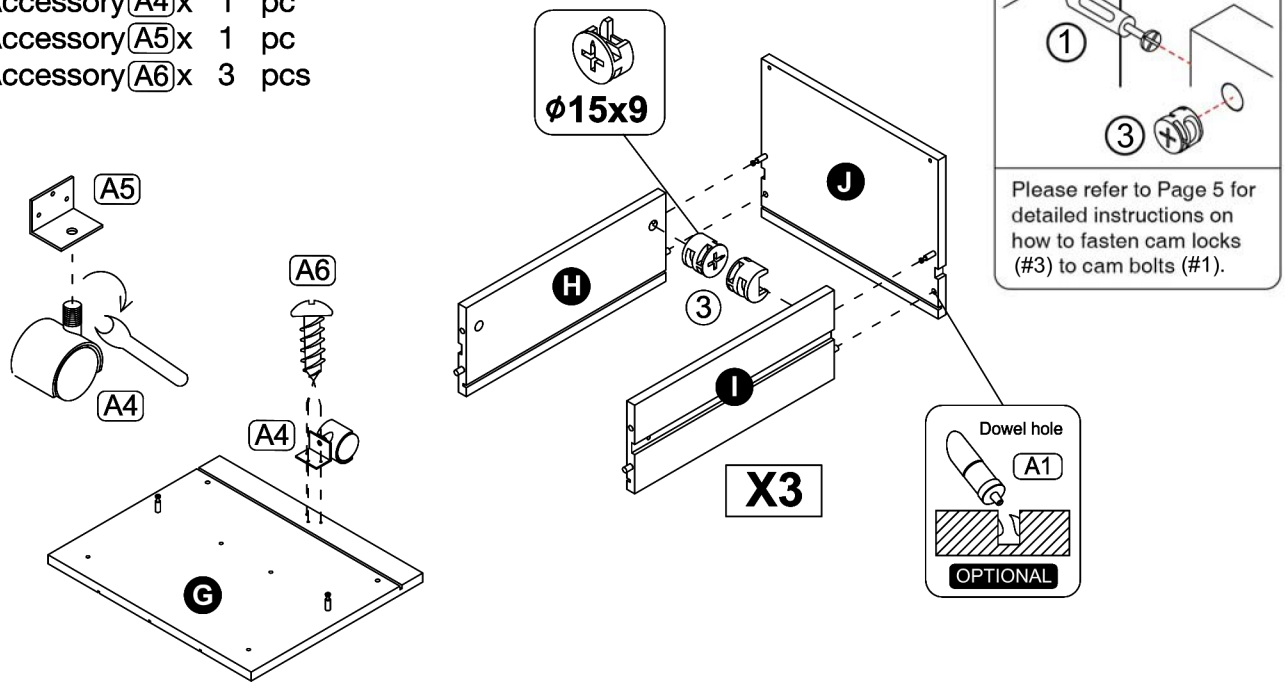

# ASSEMBLY INSTRUCTIONS

# 3

Part K x 1 pcs
Part F x 1 pcs
Part G x 1 pcs
Hardware ③ x 6 pcs
Accessory A8 x 3 sets
Accessory A9 x 6 pcs

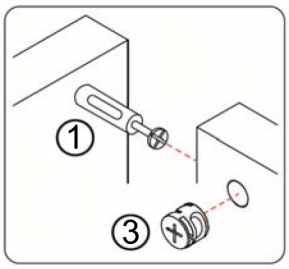


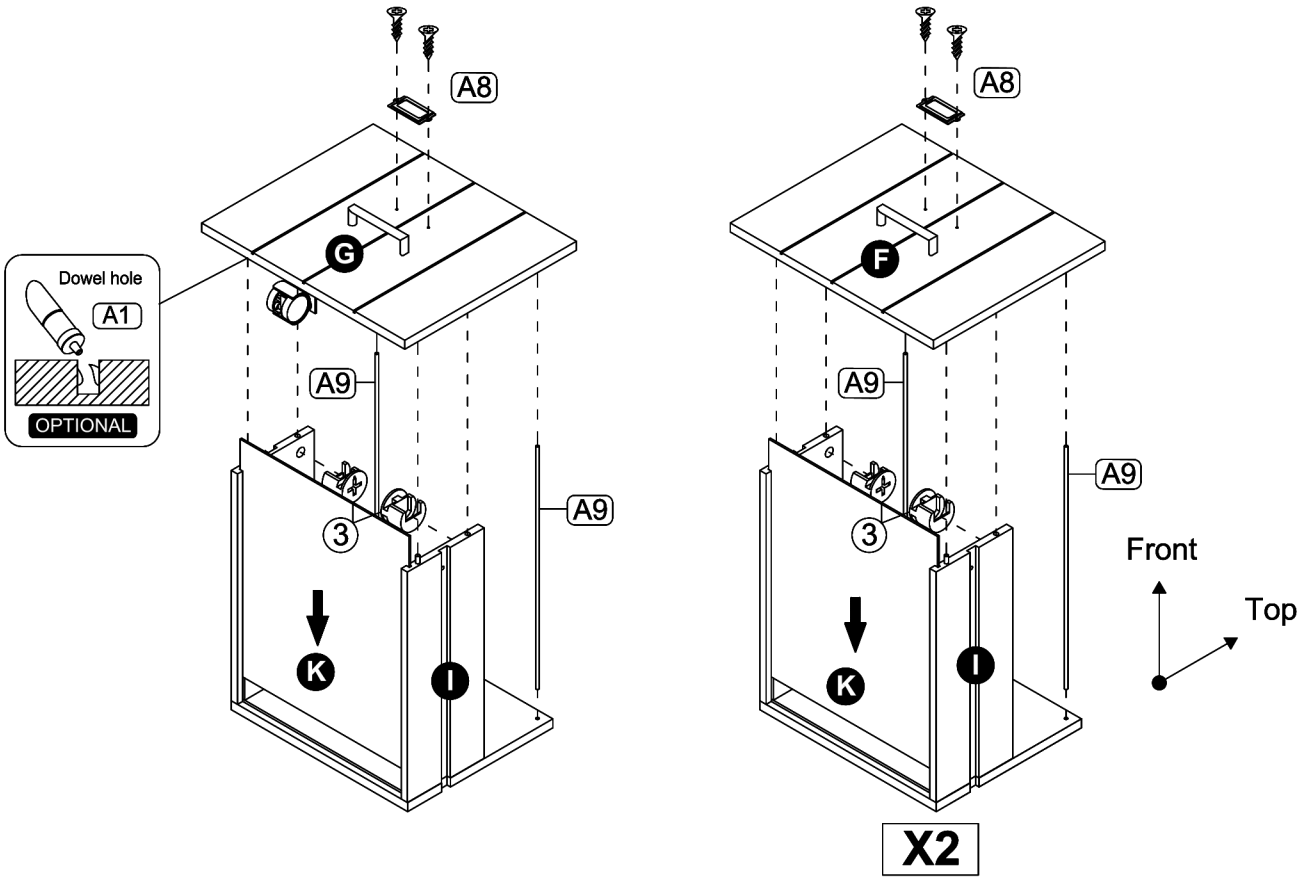

# ASSEMBLY INSTRUCTIONS

# 4

Hardware ① x 8 pcs
Hardware ⑤ x 6 pcs (8x30)
Hardware ⑦ x 6 pcs
Hardware ⑧ x 18 pcs

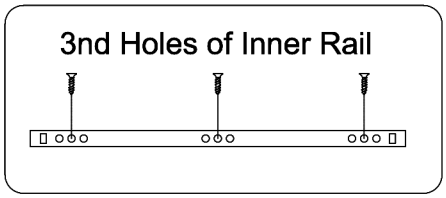


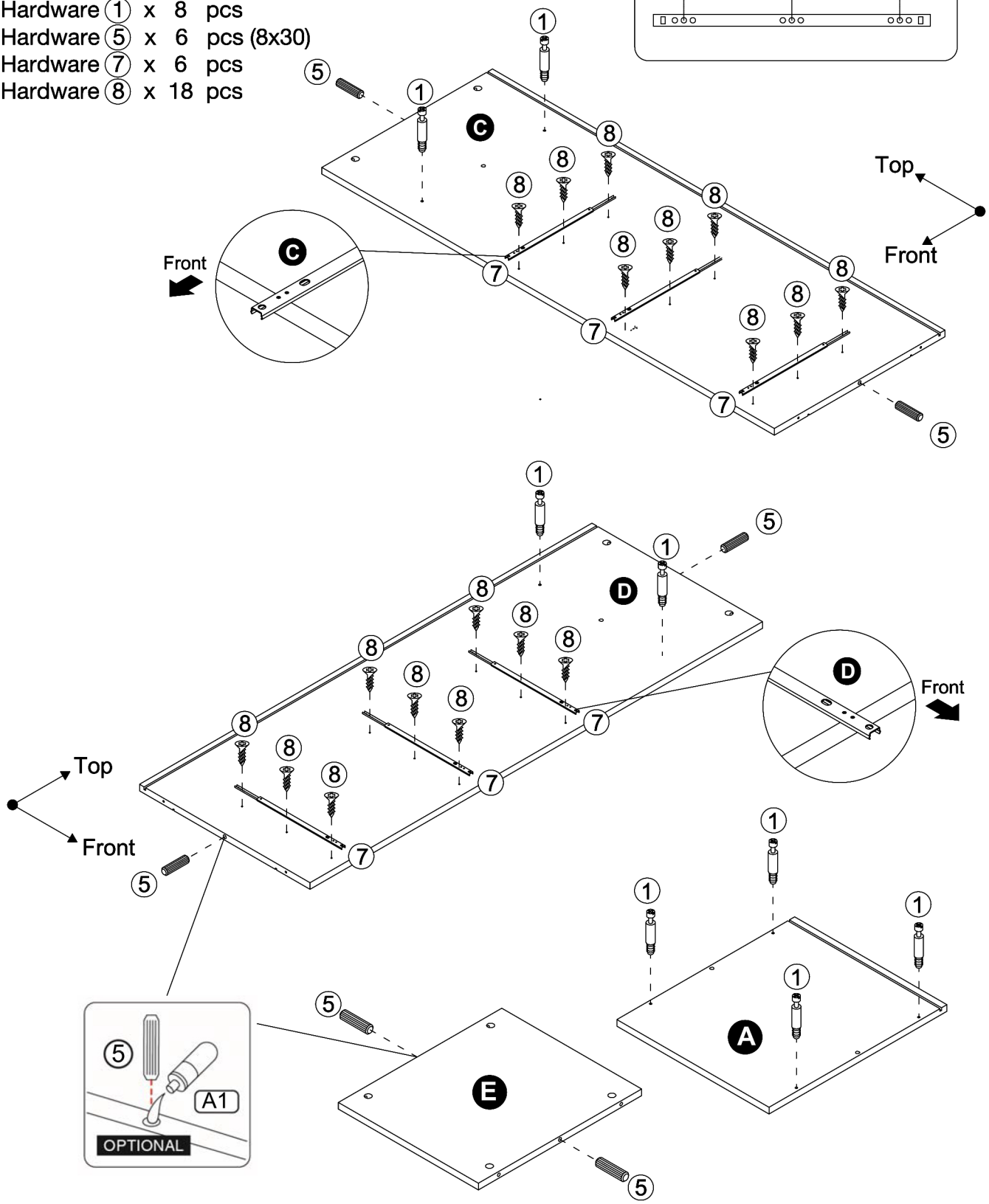

# ASSEMBLY INSTRUCTIONS

## 5

Part C x 1 pc
Part D x 1 pc
Part E x 1 pc
Hardware ② x 4 pcs

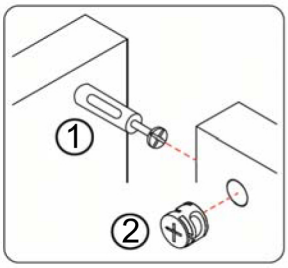


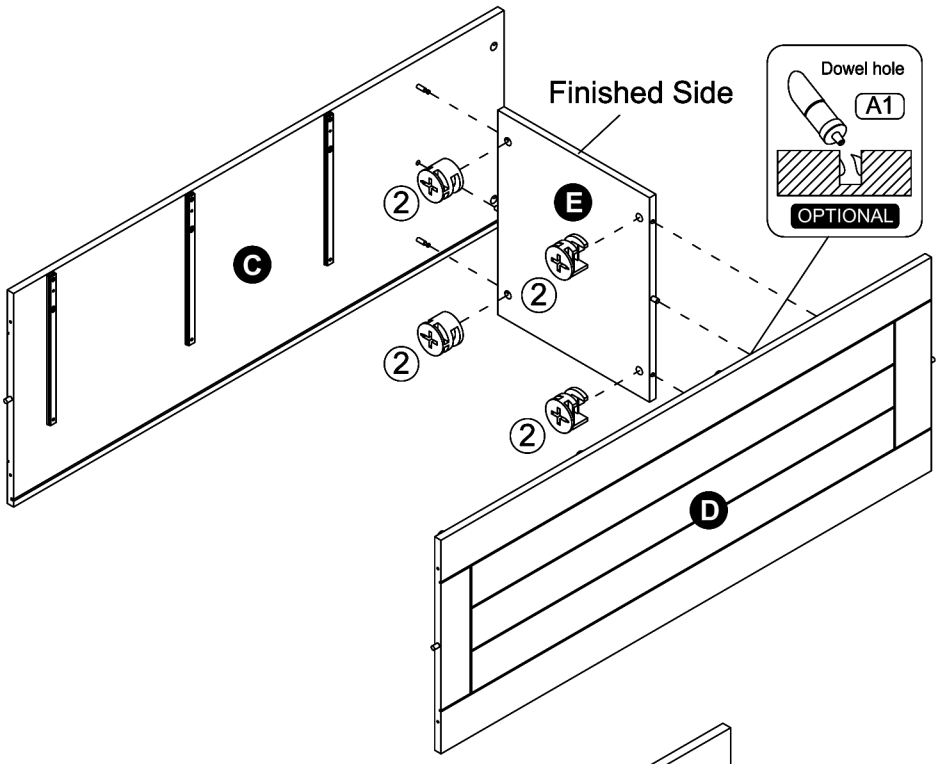


## 6

Part B x 1 pc
Hardware ④ x 4 pcs

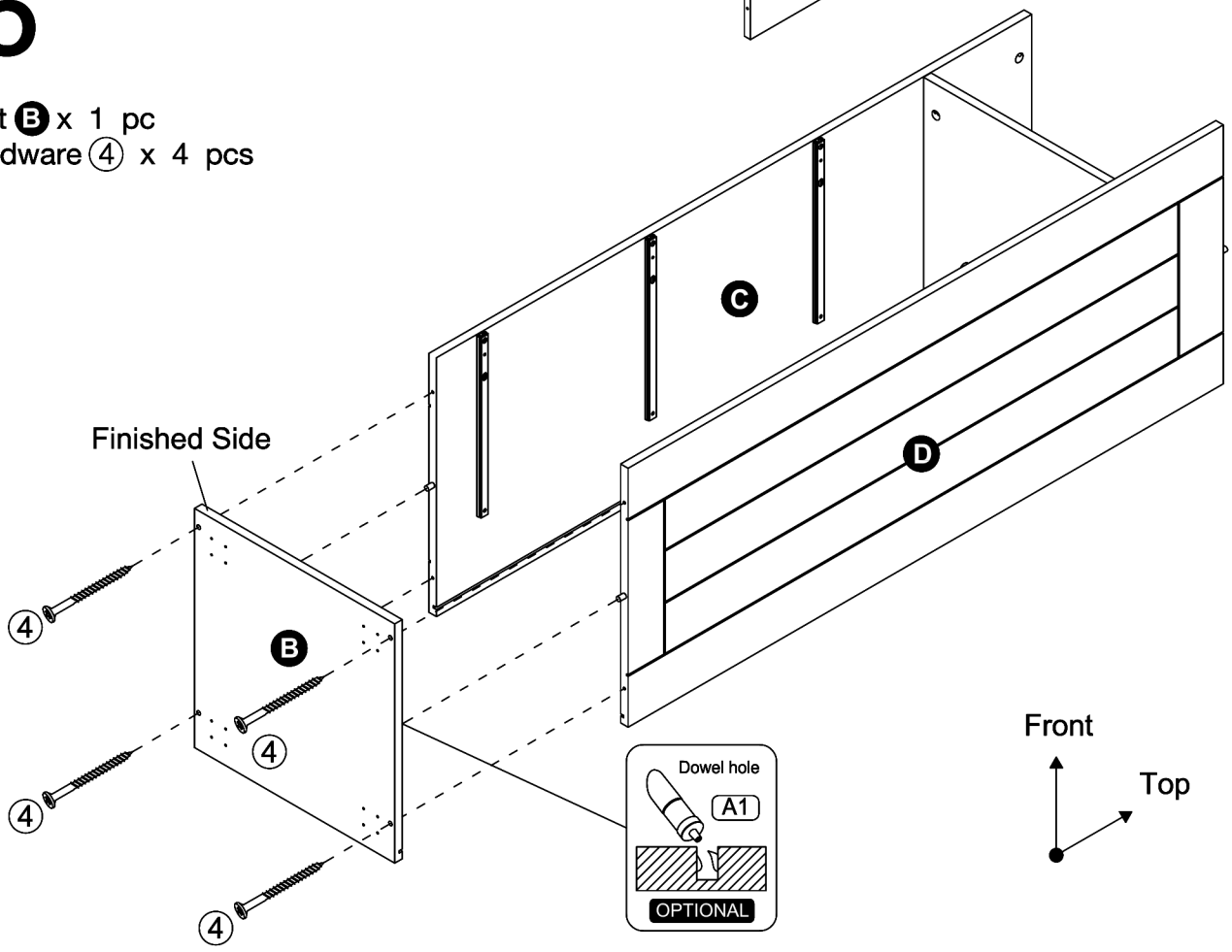

# ASSEMBLY INSTRUCTIONS

# 7

Accessory A2 x 2 pcs
Accessory A3 x 2 pcs
Accessory A6 x 16 pcs

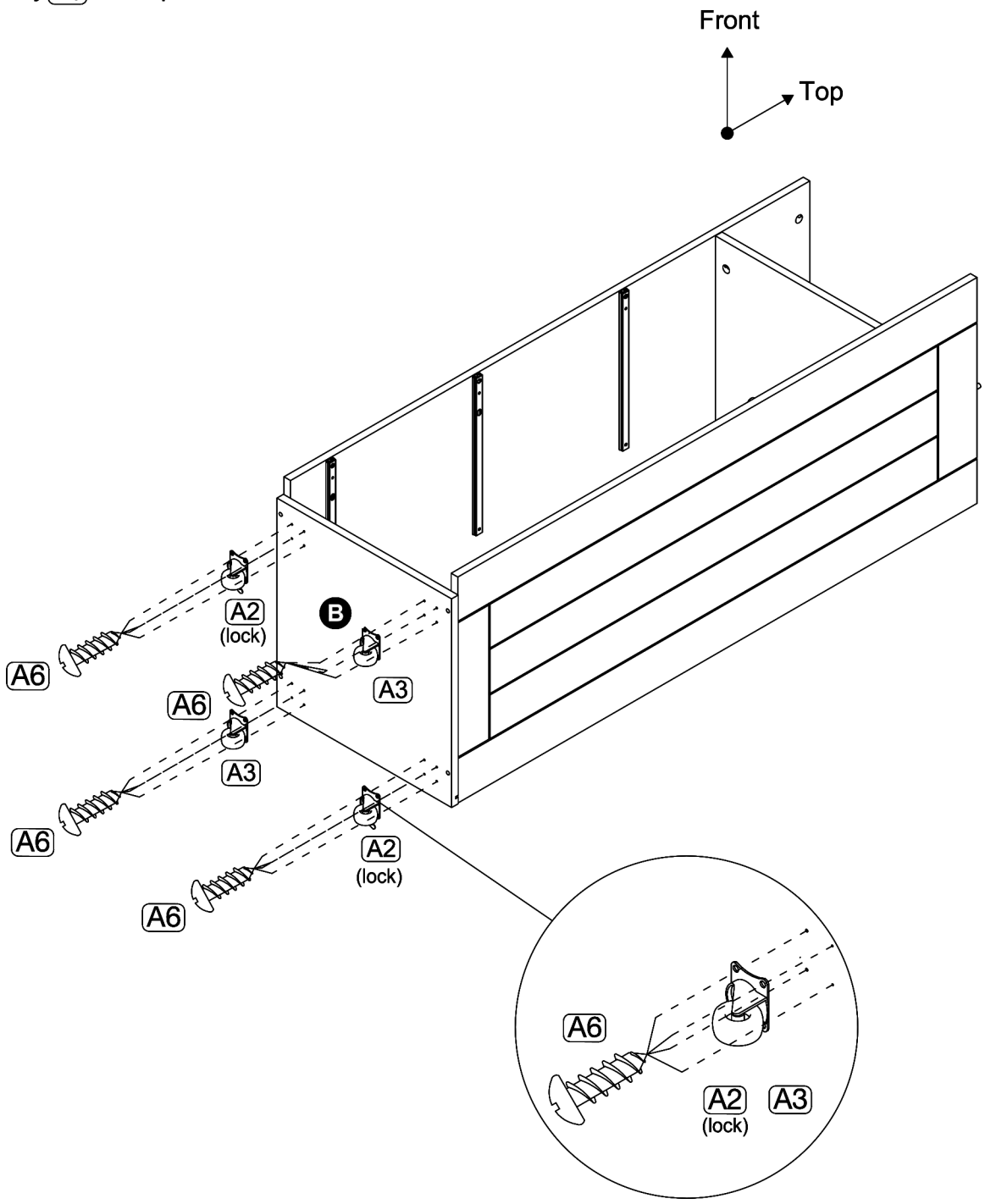

# ASSEMBLY INSTRUCTIONS

# 8

Part A x 1 pc
Part L x 1 pc
Hardware ② x 4 pcs
Hardware ⑩ x 6 pcs

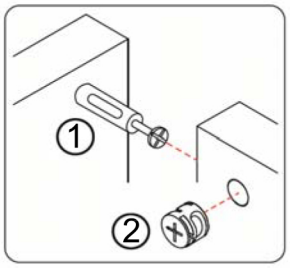


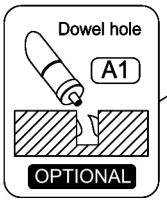


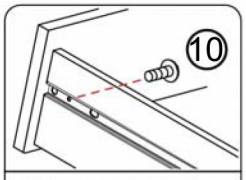


Fully extend drawer rails then align the rail's smallest hole to the drawer side panel's holes. Secure with bolts (#10).

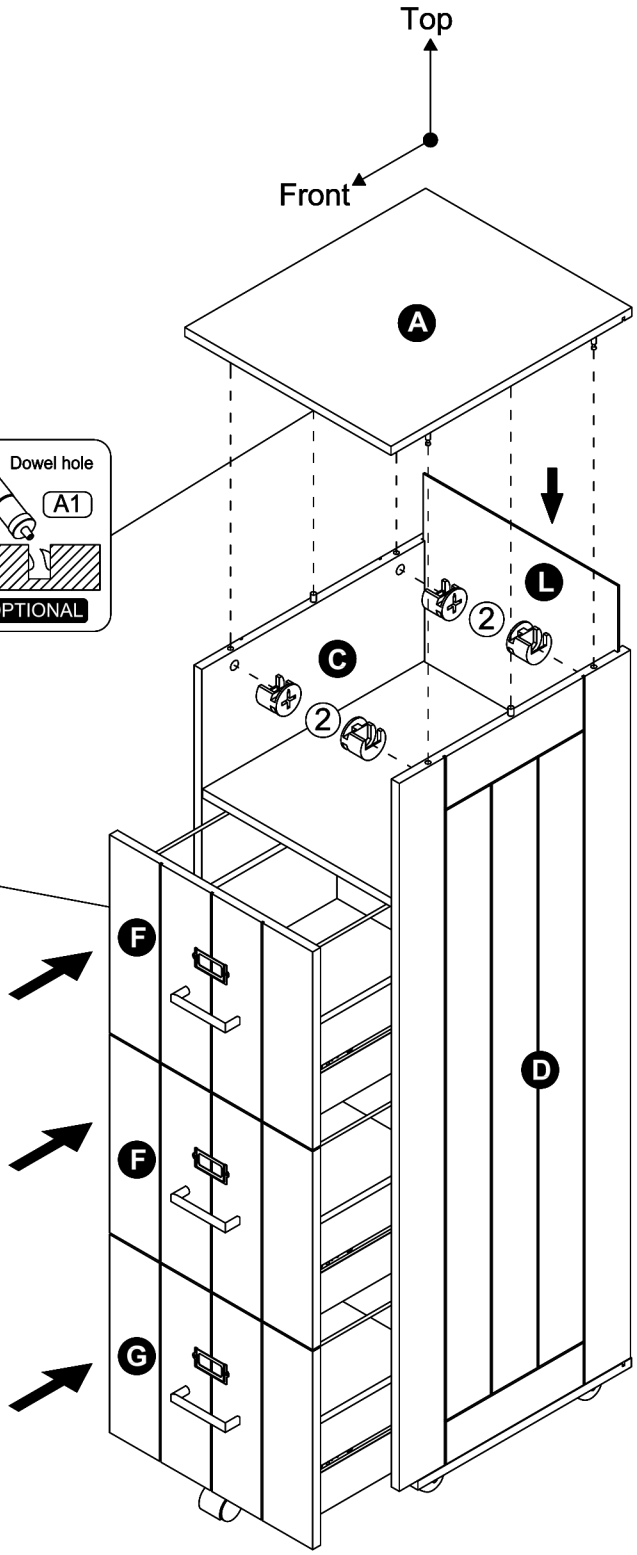

# ASSEMBLY INSTRUCTIONS

# 9

Hardware ⑨ x 4 sets
Accessory A11 x 2 sets

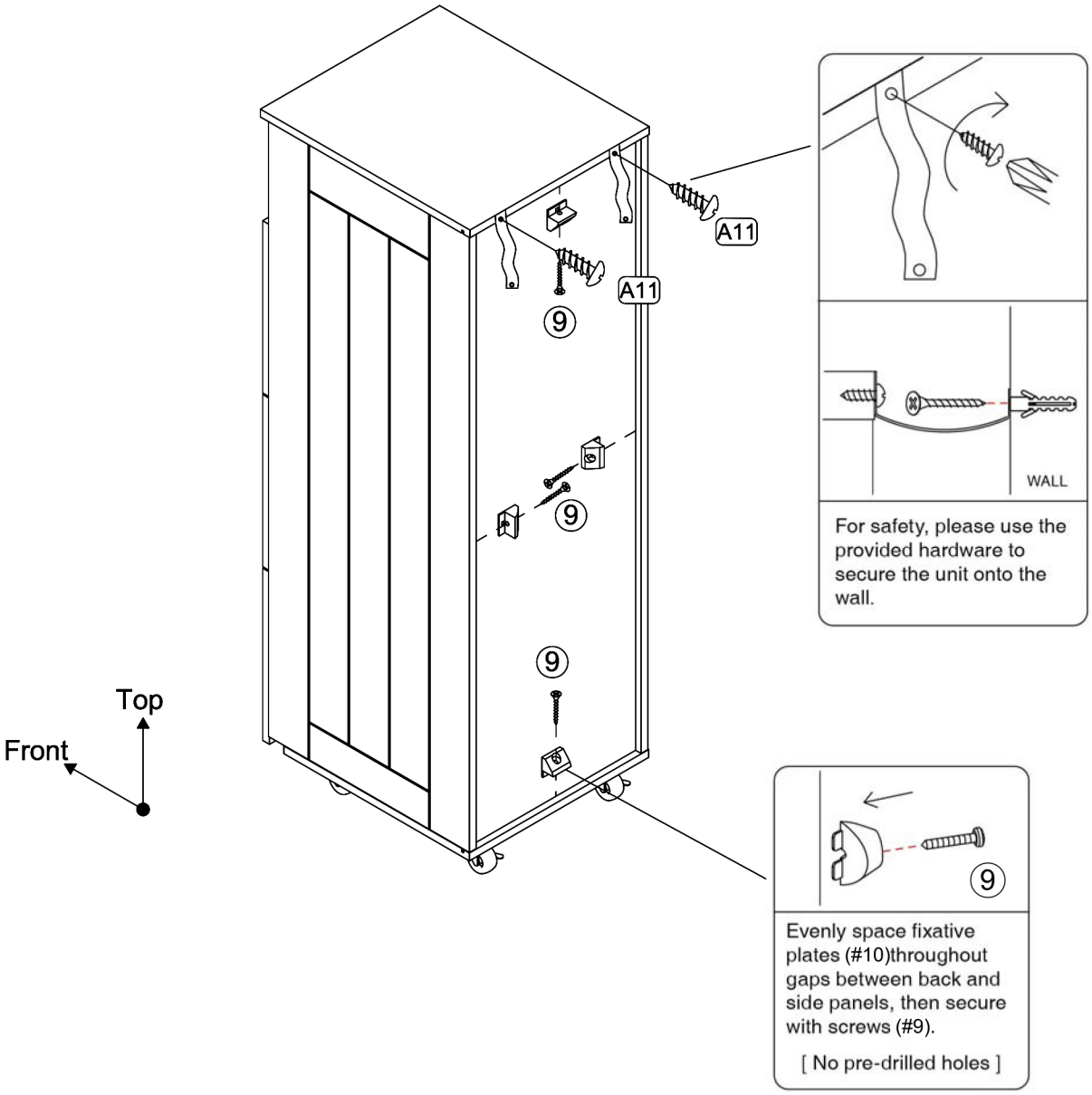

# ASSEMBLY INSTRUCTIONS

# 10

Accessory A10 x 4 pcs

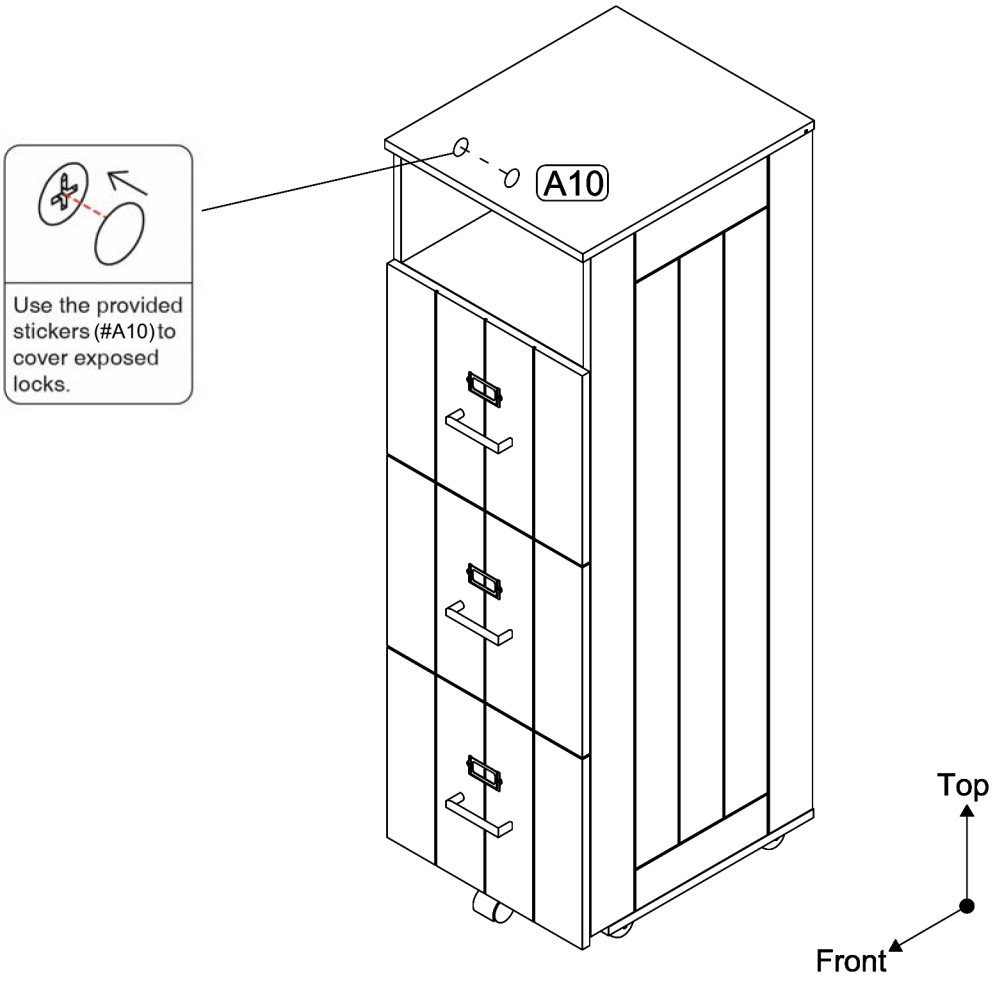

# ASSEMBLY INSTRUCTIONS

# 11

## ASSEMBLY COMPLETED

Please ensure the furniture rests on an even and flat surface. If the product wobbles or feels loose, double-check all bolts and/or screws are properly tightened and secured.

### Keep this handy!

Please retain this instruction manual and any order-related information for future reference.

### Lift, don't drag!

To avoid damage to product please always LIFT the product when transporting of adjusting the placement.

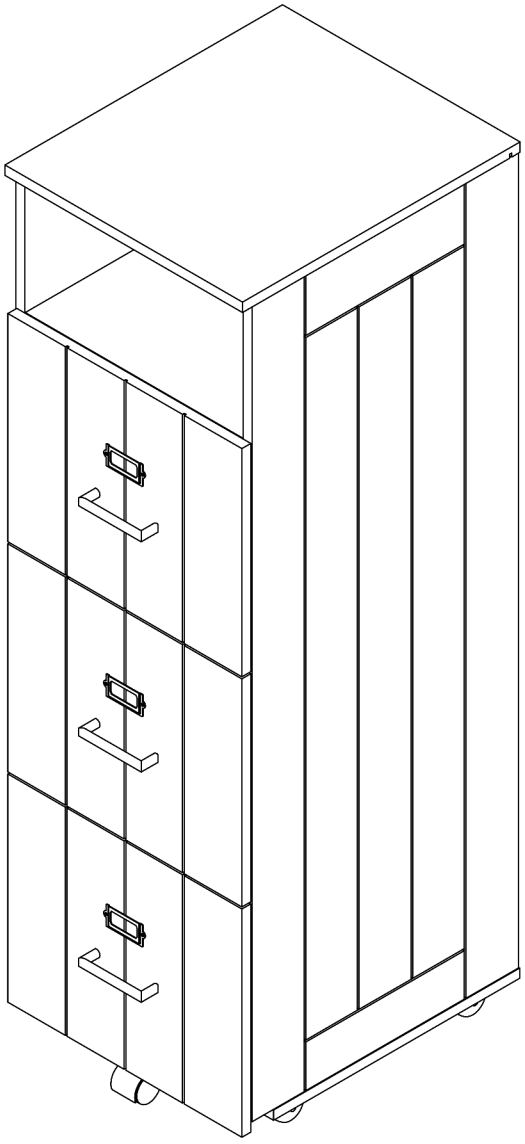

# ASSEMBLY INSTRUCTIONS

## Wall Mounting and Fixing

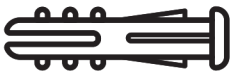

### EXPANSION WALL ANCHOR

Our provided expansion wall anchors are only suitable for masonry walls, such as drywall, plaster or concrete, and are best for holding lightweight items or for anti-tip prevention. If you are unsure of the correct wall anchor to use with the product, please request professional guidance. liability for product damage or failure due to using the incorrect anchors will fall on the installer.

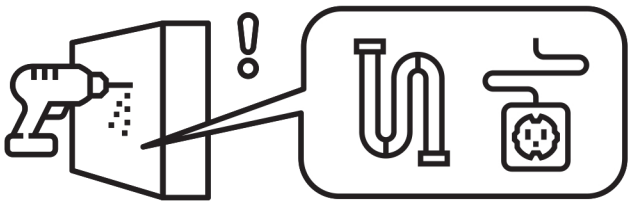

### CHECK BEFORE PROCEEDING

Prior to drilling or hammering, please check for wires or pipes. We recommend using a stud finder to locate a stud, which will offer more appropriate resistance and hold more weight.

## QUICK TIPS

1.If unsure of the proper size, always choose a larger screw and wall anchor.

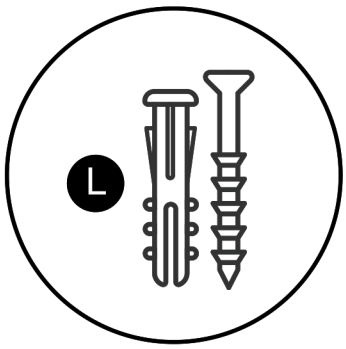


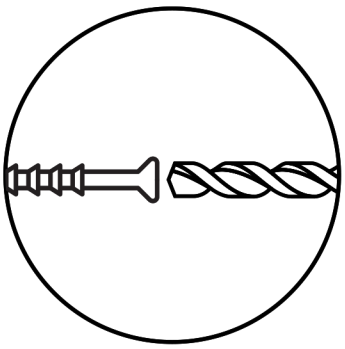

2. Match the drill bit to the wall anchor and hole size.

3. Only drill horizontally. Do not force the drill or enlarge the hole for the wall anchor.

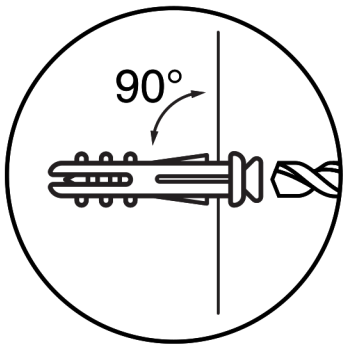


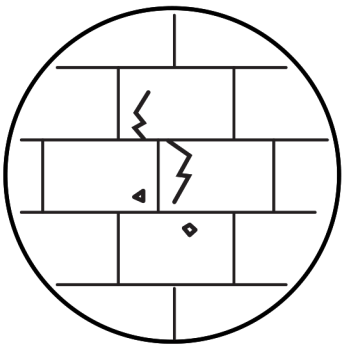

4. Take extra care when drilling into high walls or ceramic tiles. Wall anchors should be a tight fit for the hole. Never use wall anchors in ceilings.

### MAINTENANCE

Yearly Check

We recommend a yearly check to see if the wall anchor or screw has loosened. If so, please remove the existing wall anchor and screw, and use a new anchor.