ASSEMBLY INSTRUCTIONS

TOOLS REQUIRED

Allen Wrench

(Included)

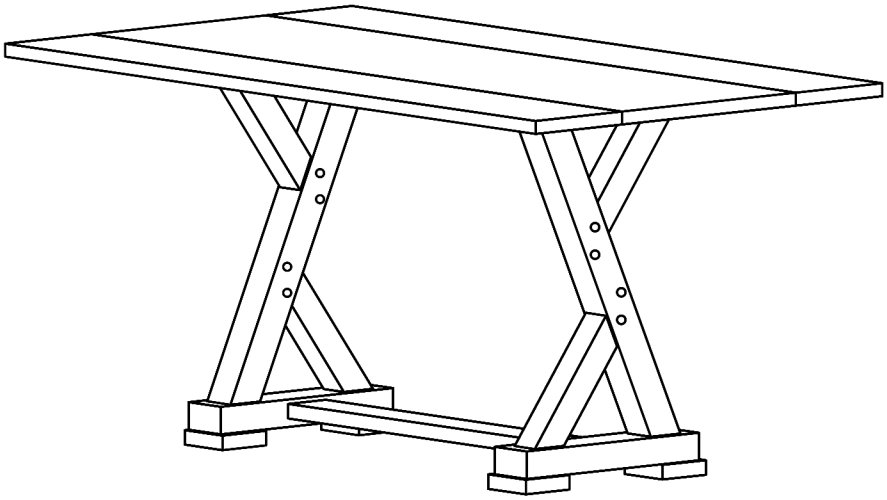

2 - People Recommended

ASSEMBLY RATING

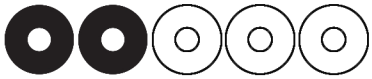

EASY ⟶ DIFFICULT

The Assembly Rating is a 5-point system showing the level of effort needed to assemble a specific product.

VERSION # 22-01-11

CHECK BEFORE STARTING

- [ ] **Are you missing anything?**
  Double-check all parts, hardware and accessories listed are all acccounted for.

- [ ] **Should we send any replacements?**
  Are there any irregularities or flaws in the parts? We can send replacements!

- [ ] **Check out our Quick Tips!**
  We recommend reviewing the pre-assembly handouts. Even experts need a refresher now and then!

- [ ] **Prep Time!**
  Please review the assembly instructions and all diagrams prior to assembling.

PRE ASSEMBLY INTRODUCTION

We understand building ready-to-assemble furniture can be a challenging experience for some. To help avoid confusion, we have provided some helpful tips that may speed up the process.

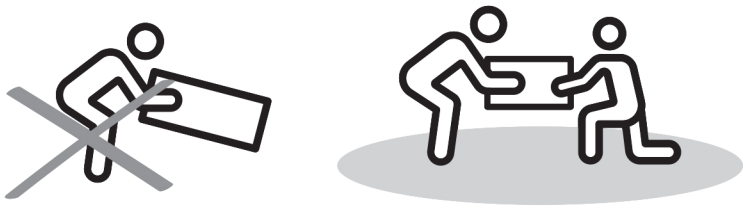

Teamwork

ALWAYS have at least two people to help with transporting and assembling the product to avoid potential injury and/or damage.

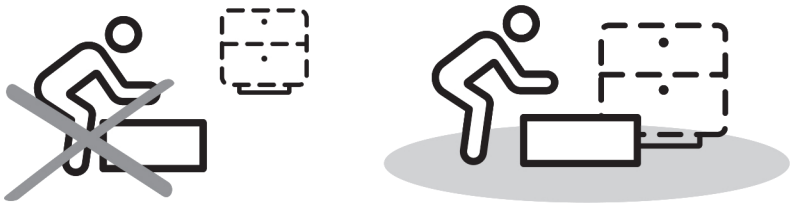

Suitable Location

Assembling near the area of the intended location is highly recommended.

Sufficient Space

Make sure you have enough space to move around during the assembly.

Avoid Scratches

Use cardboard, blankets or a carpeted area while assembling furniture to prevent to prevent scratches and damages.

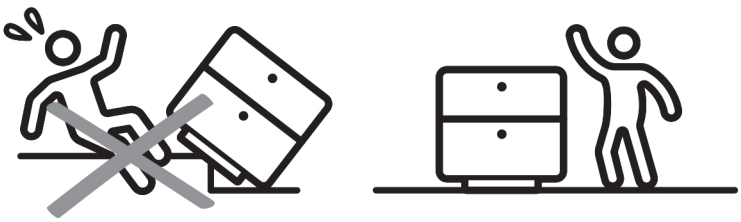

Flat Surface

Make sure the furniture rests on a flat and level surface with each leg evenly touching the floor.

ASSEMBLY AND CARE ADVICE

FAILURE TO FOLLOW THE GUIDELINES BELOW MAY RESULT IN INJURY AND/OR PROPERTY DAMAGE.

Position each part correctly and insert screws or bolts into their respective holes.

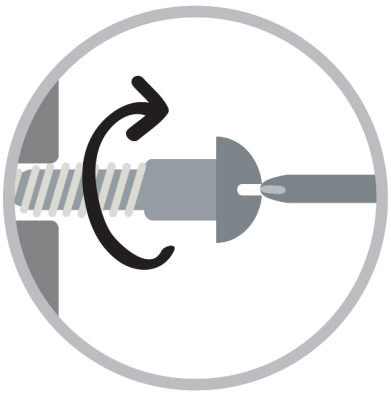

Turn clockwise to tighten and only tighten when step is completed or when instructed to do so.

Use the appropriate hand tools or power tools for assembly. Select steps, such as tightening screws and/or bolts, may require hand tools to avoid causing damage during assembly.

Save the instructions and store any supplied tools for later maintenance.

After two weeks, check and tighten any loose hardware and repeat again every six months thereafter.

IT IS THE USER'S RESPONSIBILITY TO MAINTAIN THE FURNITURE. THE HARDWARE MAY LOOSEN OVER TIME AND MAY CAUSE THE FURNITURE TO BE WOBBLY AND UNABLE TO SUPPORT ITS INTENDED WEIGHT CAPACITY. THIS MAY LEAD TO COLLAPSE AND MAY CAUSE SERIOUS INJURY.

DINING TABLE

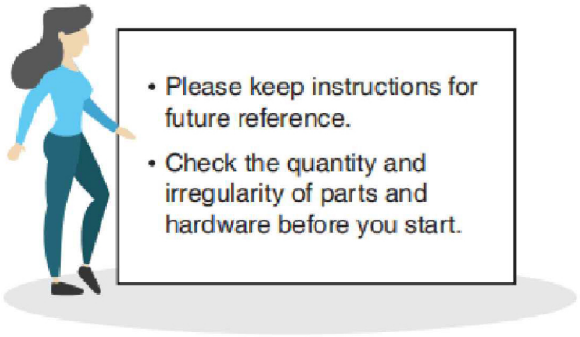

- Please keep instructions for future reference.
- Check the quantity and irregularity of parts and hardware before you start.

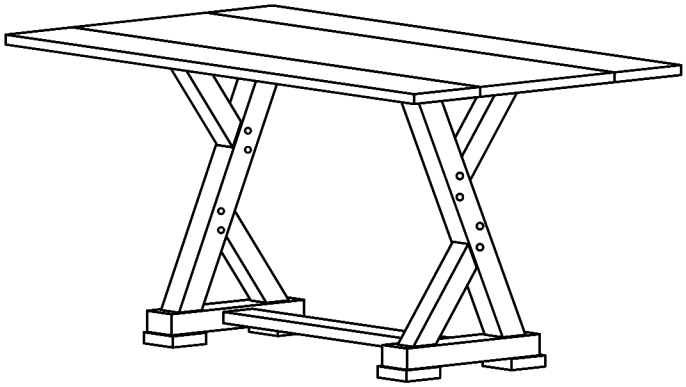

PARTS

#1 1pc

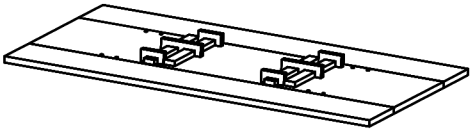

Table Top

#2 1pc

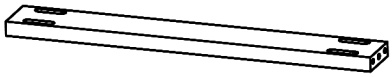

Base Stretcher

#3 2pcs

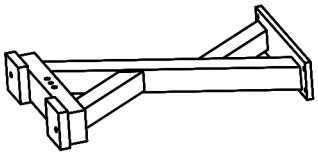

Table Leg

HARDWARE

#A 8pcs

M6 x 35MM
Bolt

#B 4pcs

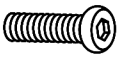

M6 x 50MM
Bolt

#C 12pcs

M6 x 13MM
Spring Washer

#D 8pcs

M6 x 19MM
Flat Washer

#E 4pcs

D Shape Spacer

#F 2pcs

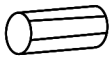

M10 x 30MM
Wood Dowel

#G 4pcs

M6 Adjuster
Leg Leveler

#H 1pc

M4 x 110MM
Allen Wrench

ASSEMBLY INSTRUCTIONS

1

Insert Wood Dowel (#F) to Base Stretcher (#2).

Part #2 x1pc
Hardware #F x2pcs

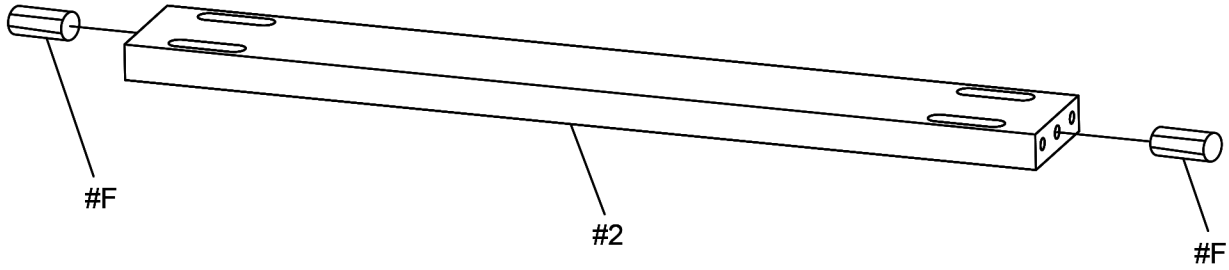

2

Align the Table Leg (#3) to the Base Stretcher (#2), secure by using Bolts (#B) with Washers (#C, E).

Part #3 x2pcs
Hardware #B x4pcs
Hardware #C x4pcs
Hardware #E x4pcs
Hardware #H x1pc

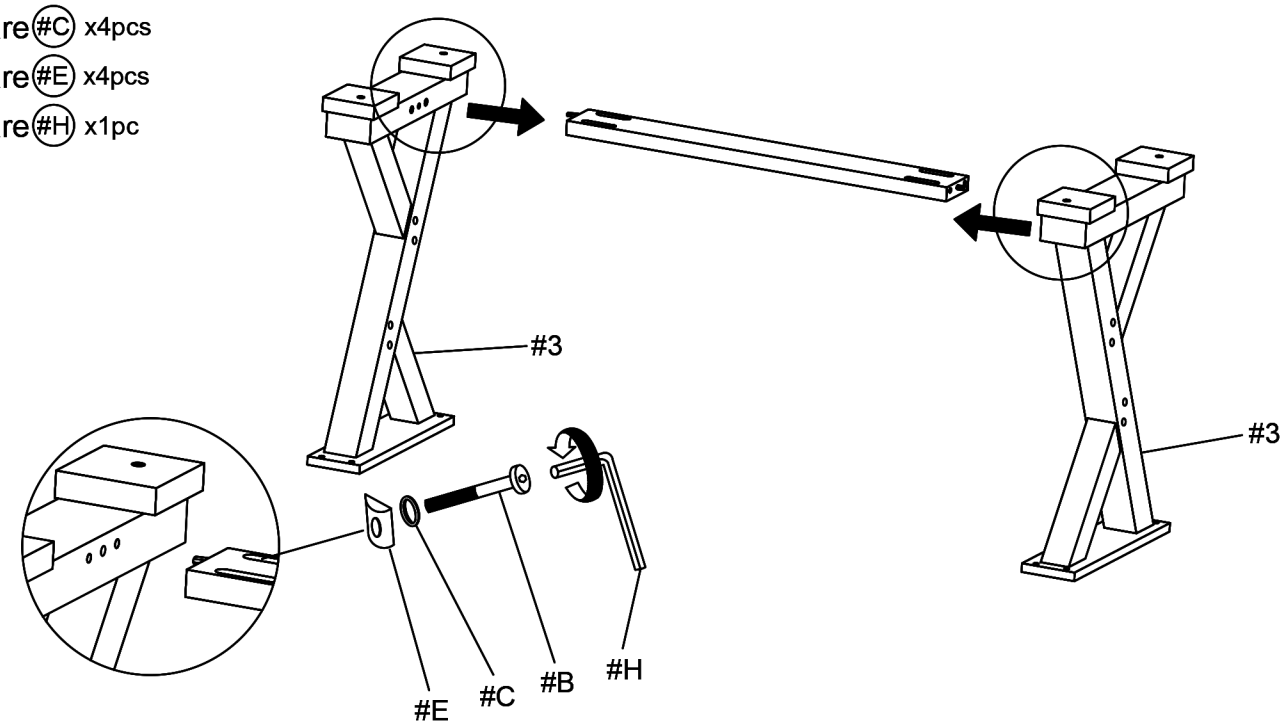

ASSEMBLY INSTRUCTIONS

3

Part #1 x1pc
Hardware #A x8pcs
Hardware #C x8pcs
Hardware #D x8pcs
Hardware #H x1pc

Align the Table Leg (#3) to the Table Top (#1), secure by using Bolts (#A) with Washers (#C, D).

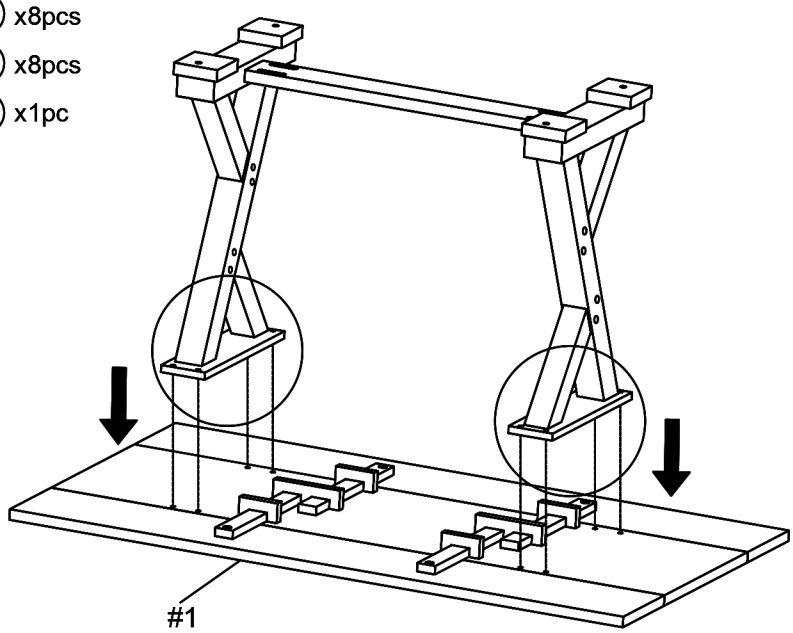

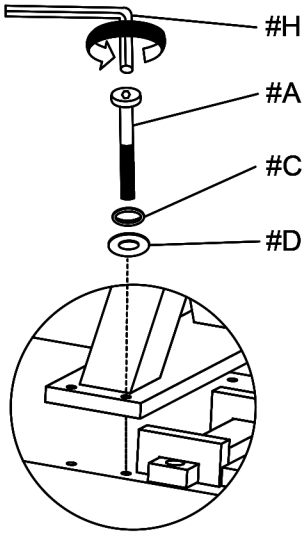

4

Hardware #G x4pcs

Insert Leveler (#G) to Table leg (#3).

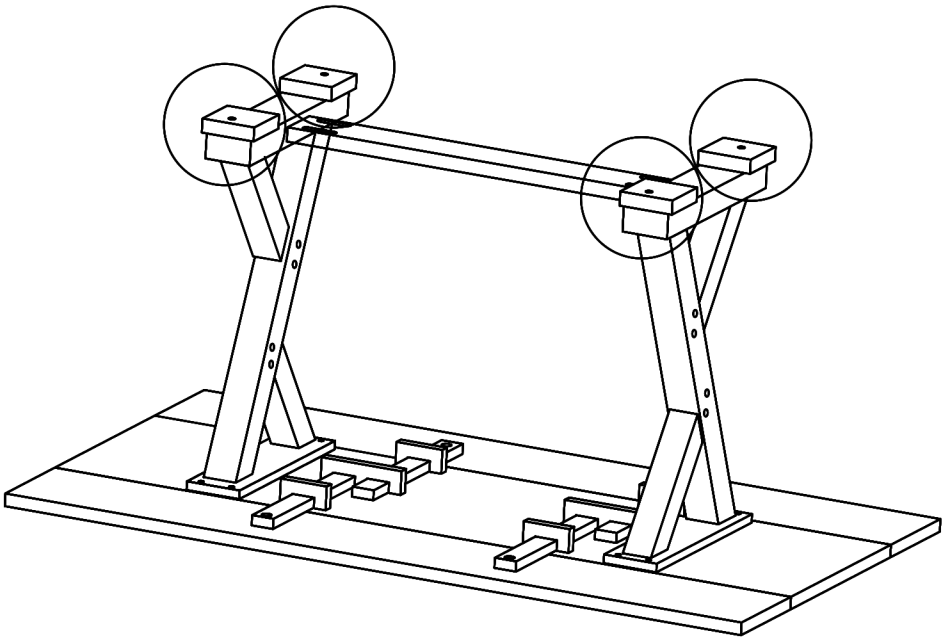

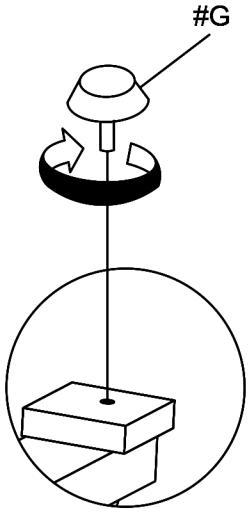

ASSEMBLY INSTRUCTIONS

5

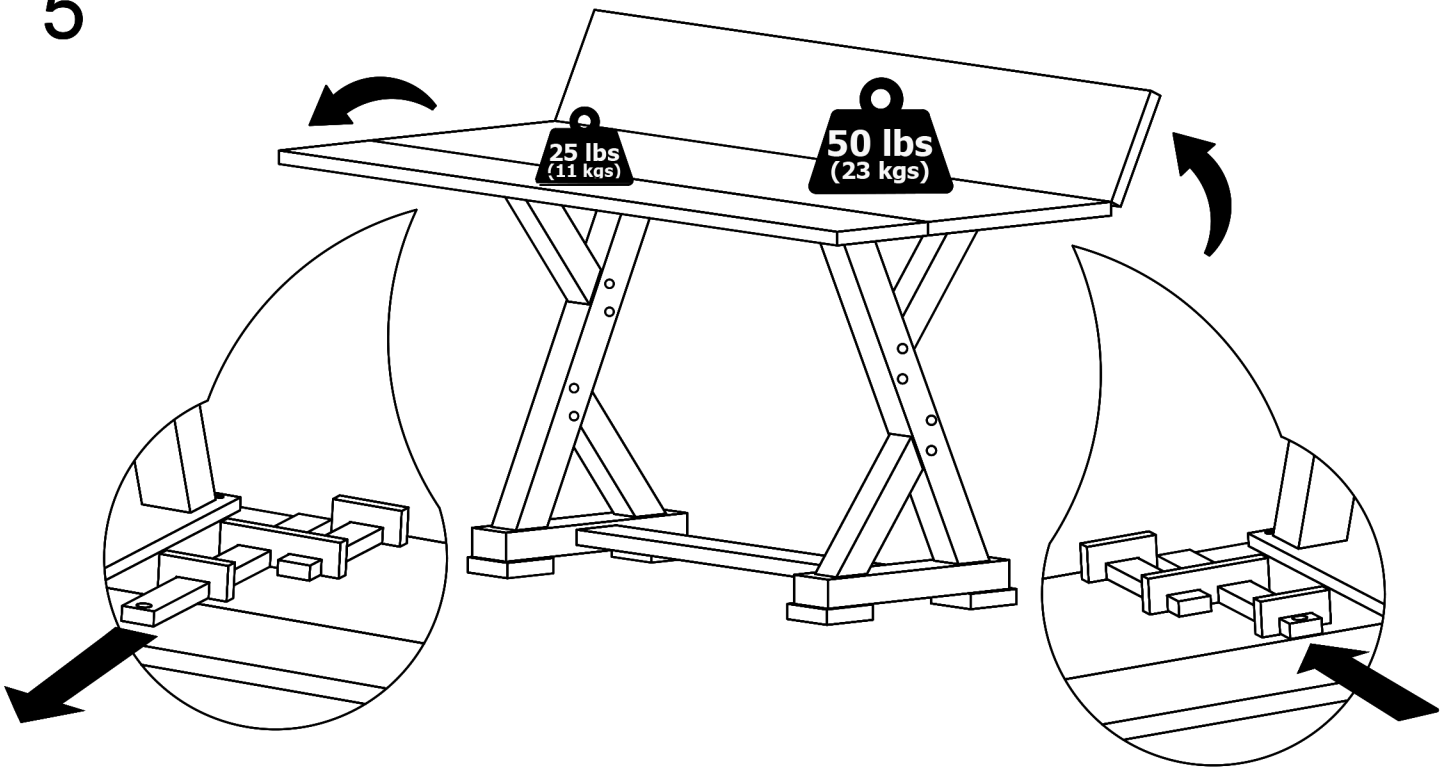

6

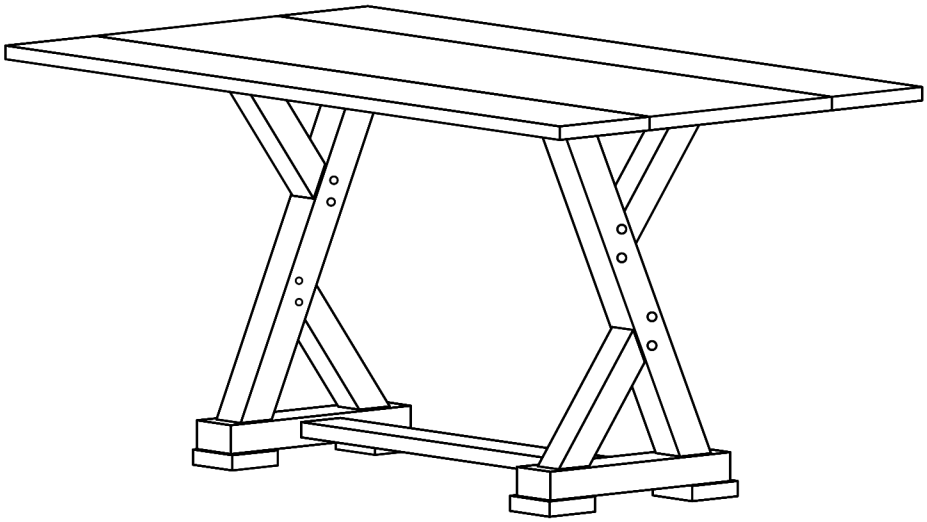

ASSEMBLY COMPLETED

Please ensure the furniture rests on an even and flat surface. If the product wobbles or feels loose, double-check all bolts and/or screws are properly tightened and secured.

Keep this handy!

Please retain this instruction manual and any order-related information for future reference.

Lift, don't drag!

To avoid damage to product please always LIFT the product when transporting of adjusting the placement.

ASSEMBLY INSTRUCTIONS

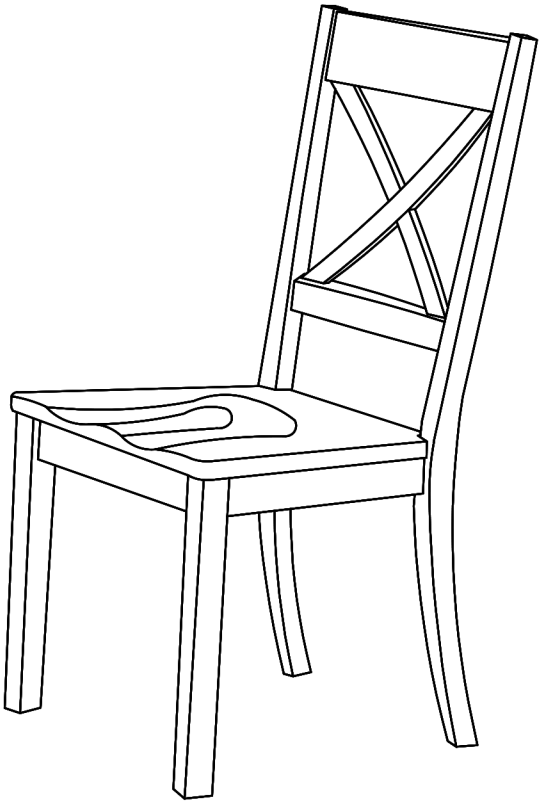

TOOLS REQUIRED

Allen Wrench

(Included)

2 - People Recommended

ASSEMBLY RATING

The Assembly Rating is a 5-point system showing the level of effort needed to assemble a specific product.

VERSION # 22-01-11

CHECK BEFORE STARTING

- [ ] **Are you missing anything?**

  Double-check all parts, hardware and accessories listed are all acccounted for.

- [ ] **Should we send any replacements?**

  Are there any irregularities or flaws in the parts? We can send replacements!

- [ ] **Check out our Quick Tips!**

  We recommend reviewing the pre-assembly handouts. Even experts need a refresher now and then!

- [ ] **Prep Time!**

  Please review the assembly instructions and all diagrams prior to assembling.

PRE ASSEMBLY INTRODUCTION

We understand building ready-to-assemble furniture can be a challenging experience for some. To help avoid confusion, we have provided some helpful tips that may speed up the process.

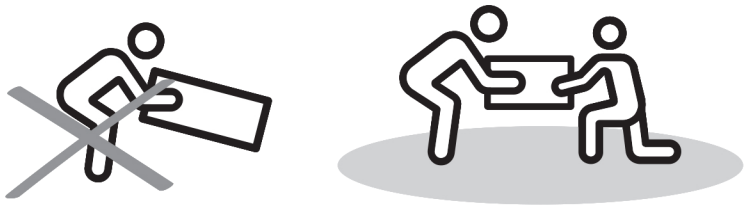

Teamwork

ALWAYS have at least two people to help with transporting and assembling the product to avoid potential injury and/or damage.

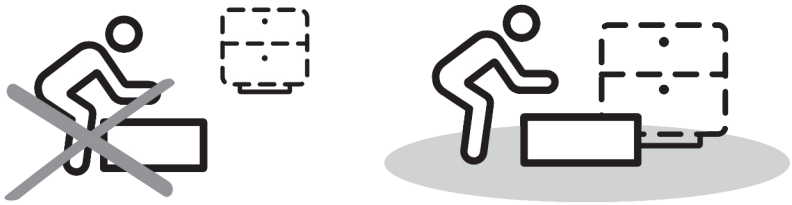

Suitable Location

Assembling near the area of the intended location is highly recommended.

Sufficient Space

Make sure you have enough space to move around during the assembly.

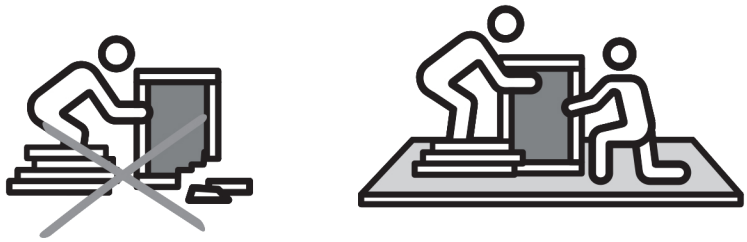

Avoid Scratches

Use cardboard, blankets or a carpeted area while assembling furniture to prevent to prevent scratches and damages.

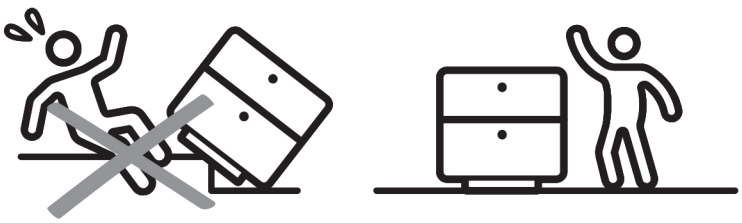

Flat Surface

Make sure the furniture rests on a flat and level surface with each leg evenly touching the floor.

ASSEMBLY AND CARE ADVICE

FAILURE TO FOLLOW THE GUIDELINES BELOW MAY RESULT IN INJURY AND/OR PROPERTY DAMAGE.

Position each part correctly and insert screws or bolts into their respective holes.

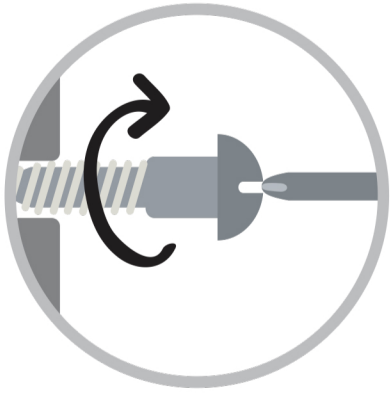

Turn clockwise to tighten and only tighten when step is completed or when instructed to do so.

Use the appropriate hand tools or power tools for assembly. Select steps, such as tightening screws and/or bolts, may require hand tools to avoid causing damage during assembly.

Save the instructions and store any supplied tools for later maintenance.

After two weeks, check and tighten any loose hardware and repeat again every six months thereafter.

IT IS THE USER'S RESPONSIBILITY TO MAINTAIN THE FURNITURE. THE HARDWARE MAY LOOSEN OVER TIME AND MAY CAUSE THE FURNITURE TO BE WOBBLY AND UNABLE TO SUPPORT ITS INTENDED WEIGHT CAPACITY. THIS MAY LEAD TO COLLAPSE AND MAY CAUSE SERIOUS INJURY.

SIDE CHAIR WITH WOODEN SEAT

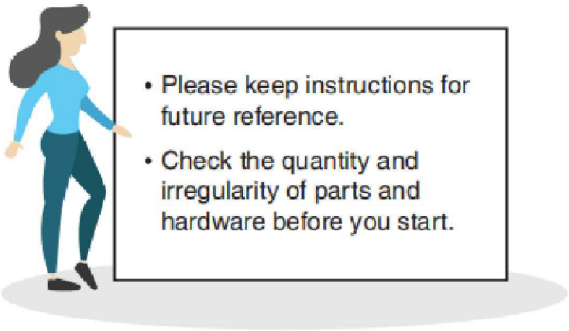

- Please keep instructions for future reference.
- Check the quantity and irregularity of parts and hardware before you start.

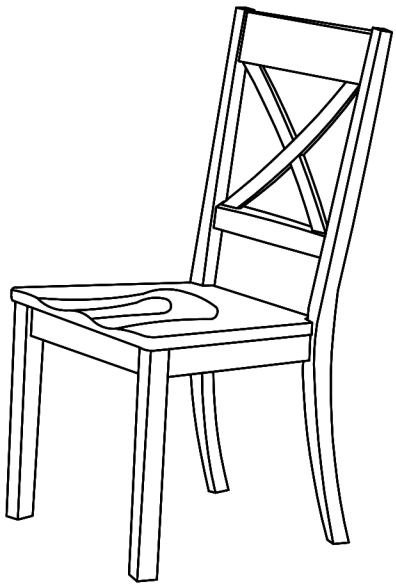

X2

PARTS

#1 1pc x 2

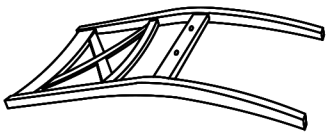

Chair Back

#2 1pc x 2

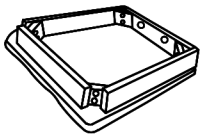

Wooden Seat

#3 2pc x 2

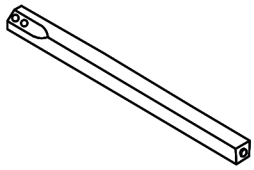

Front Leg

HARDWARE

#A 2pc x 2

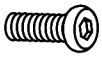

M6 x 35MM
Bolt

#B 4pcs x 2

M6 x 60MM
Bolt

#C 4pcs x 2

M6 x 80MM
Bolt

#D 10pcs x 2

M6 x 13MM
Spring Washer

#E 10pcs x 2

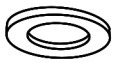

M6 x 19MM
Flat Washer

#F 1pc

M4 X 110MM
Allen Wrench

ASSEMBLY INSTRUCTIONS

1

Align Wooden Seat (#2) to Chair Back (#1) and secure middle holes using Bolts (#A) with washers (#D, E).

Part #1 x1pc
Part #2 x1pc
Hardware #A x2pcs
Hardware #D x2pcs
Hardware #E x2pcs
Hardware #F x1pc

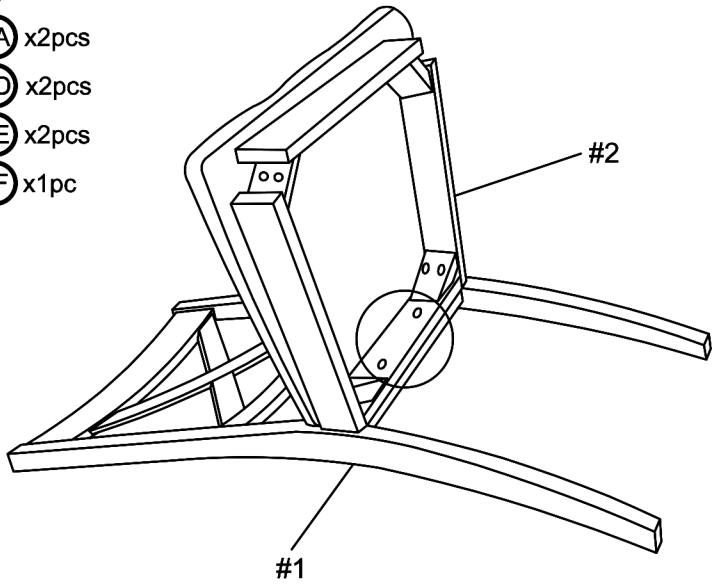

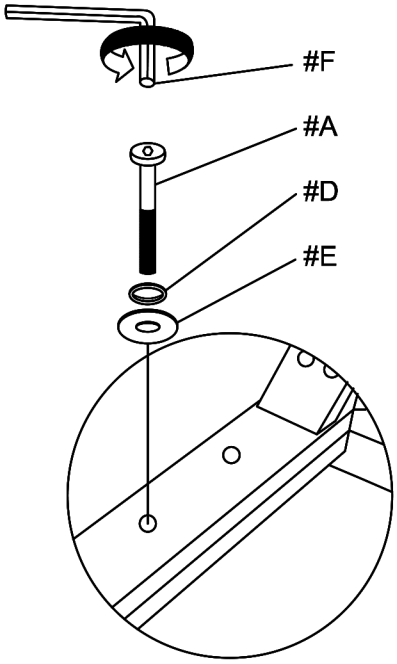

2

Align Wooden Seat (#2) to Chair Back (#1) and secure corner holes using Bolts (#C) with Washers (#D, E).

Hardware #C x4pcs
Hardware #D x4pcs
Hardware #E x4pcs
Hardware #F x1pc

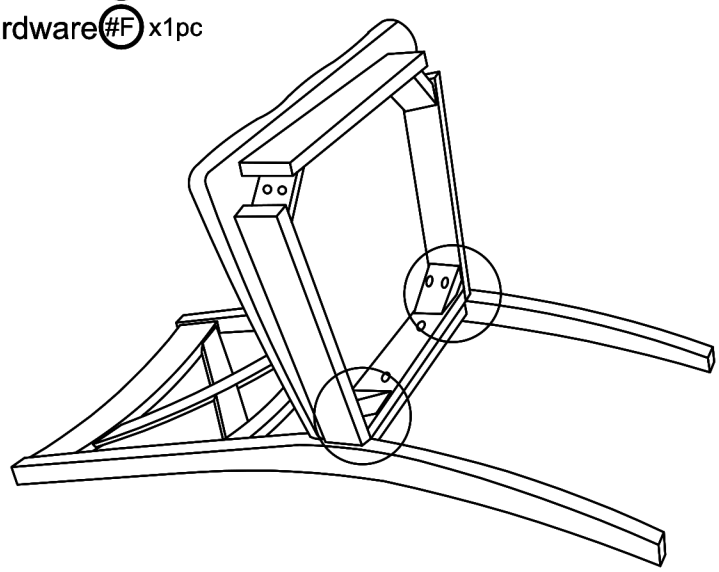

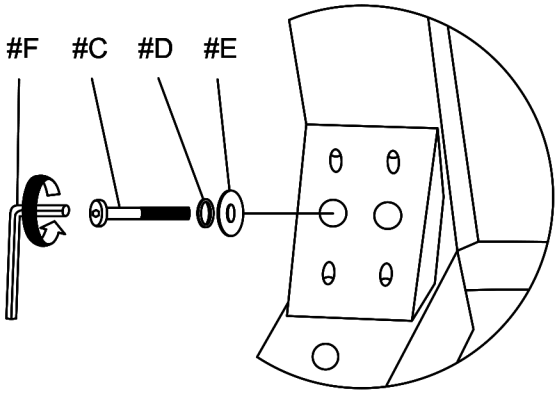

ASSEMBLY INSTRUCTIONS

Align Front Leg (#3) to the Wooden Seat (#2), then secure by using Bolts (#B) with Washers (#D, E).

3

Part #3 x2pcs
Hardware #B x4pcs
Hardware #D x4pcs
Hardware #E x4pcs
Hardware #F x1pc

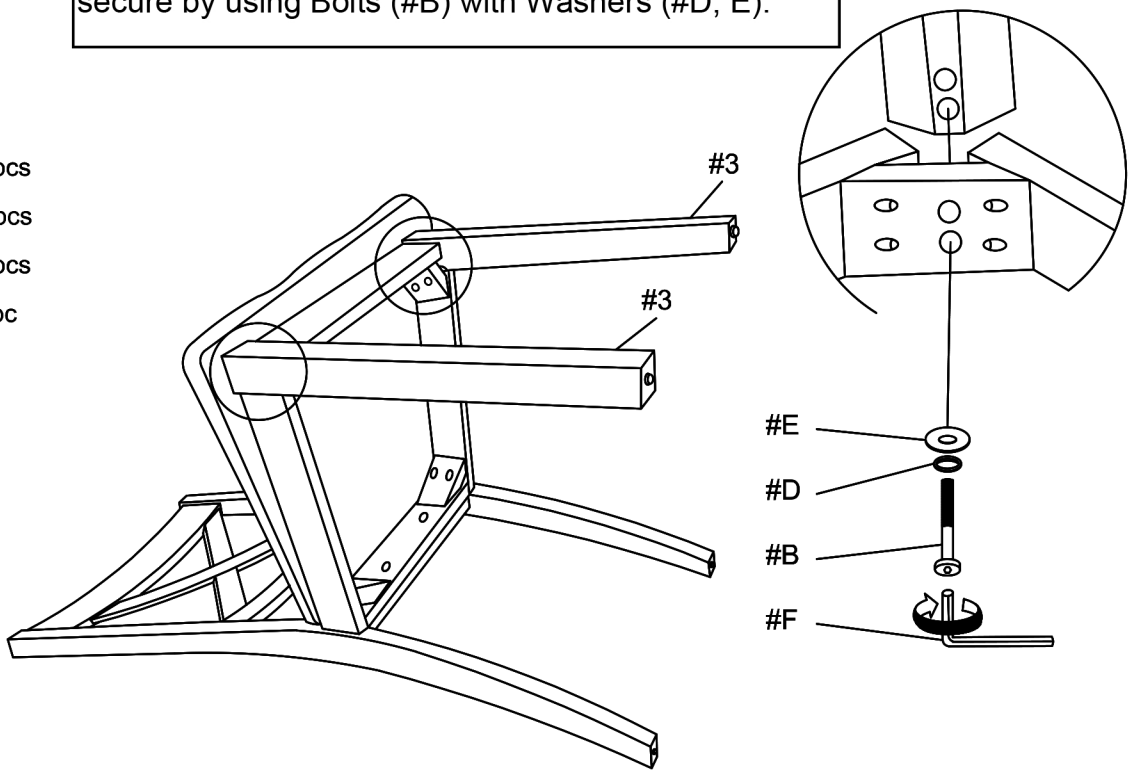

4

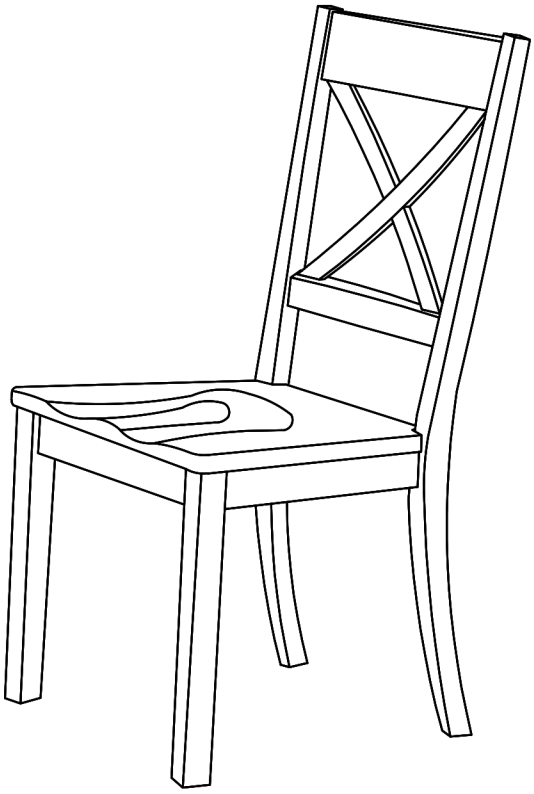

ASSEMBLY COMPLETED

Please ensure the furniture rests on an even and flat surface. If the product wobbles or feels loose, double-check all bolts and/or screws are properly tightened and secured.

Keep this handy!

Please retain this instruction manual and any order-related information for future reference.

Lift, don't drag!

To avoid damage to product please always LIFT the product when transporting of adjusting the placement.