Assembly Instructions

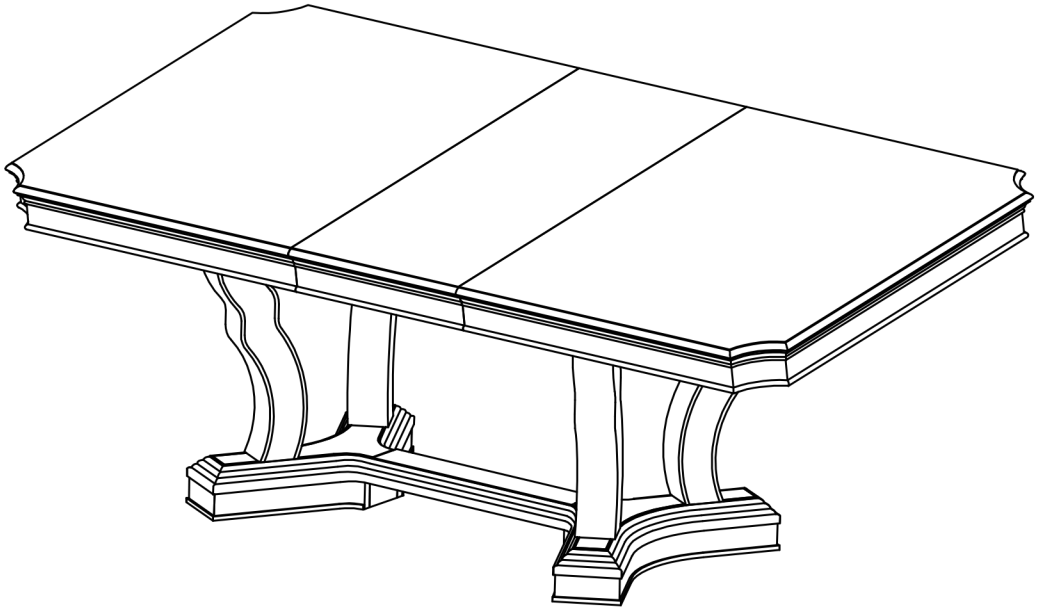

ASSEMBLY RATING

The Assembly Rating is a 5-point system that shows the degree of effort needed in assembling a specific product (with 1 being easy and 5 being difficult). For some products, two persons are recommended.

EASY 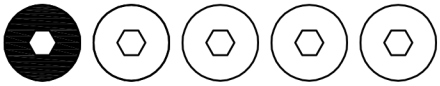 DIFFICULT

Tools Required For Assembly:

Allen Wrench 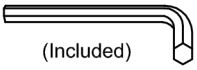
(Included)

2 PERSONS RECOMMENDED

Rev: 17-12-11

ASSEMBLY & CARE ADVICE

FOR YOUR FURNITURE TO LAST,CORRECT ASSEMBLY AND PROPER MAINTENANCE ARE NECESSARY.
PLEASE FOLLOW THE INFORMATION PROVIDED BELOW TO FULLY ENJOY YOUR FURNITURE.

BASIC ASSEMBLY TECHNIQUES

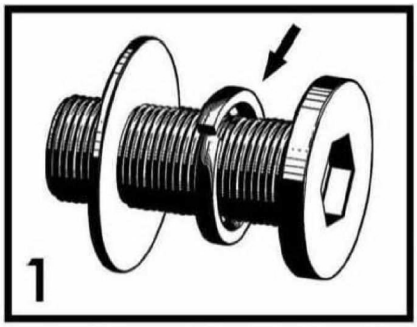

When lock or spring washer is used in an assembly, please make sure the lock or spring washer is placed between the larger flat washer and the head of the screw or bolt.

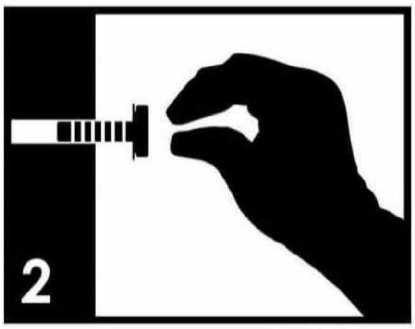

Position each part correctly and insert screws or bolts into their respective holes by hand tighten or using the proper hand tool. Only tighten when step is completed or when instructed to do so.

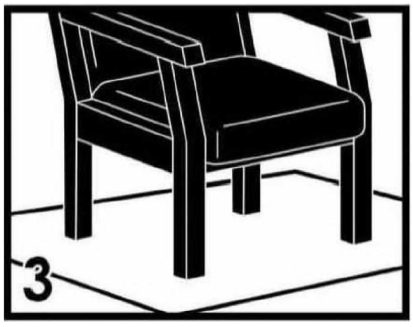

Use cardboard or carpet area when assembling furniture to prevent scratches . Make sure the furniture rests on a flat and level surface with each leg evenly touching the floor.

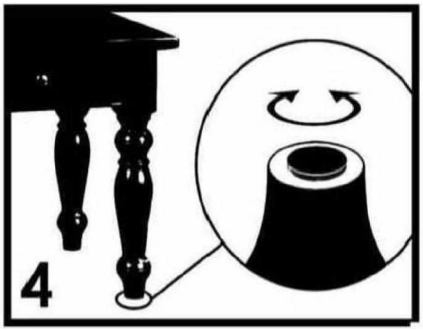

Some furniture comes with height adjustment knobs underneath each leg. To lower or to raise each leg, you need to turn clockwise or counterclockwise, respectively.

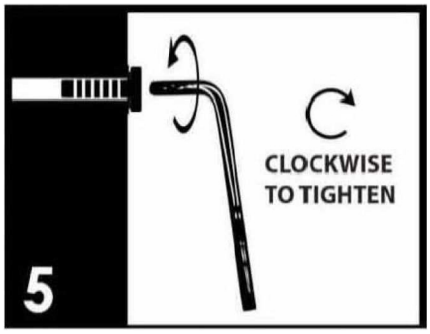

Make sure all parts are properly aligned, then use the appropriate hand tool to completely tighten the bolts or screws. Do not use power tools and do not overtighten.

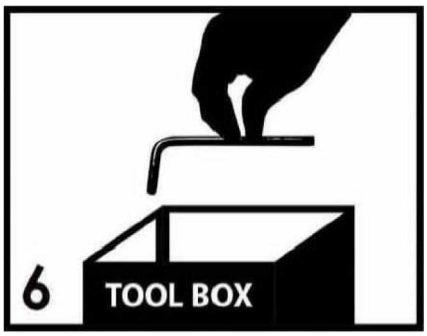

Save the instructions and store the Allen wrench or any supplied tool for later maintenance. After two weeks, check and tighten any loose hardware and repeat again every six months thereafter.

IT IS THE USER'S RESPONSIBILITY TO MAINTAIN THE FURNITURE.THE HARDWARE MAY LOOSEN OVER TIME AND MAY CAUSE THE FURNITURE TO BE WOBBLY AND UNABLE TO SUPPORT ITS INTENDED WEIGHT CAPACITY. THIS MAY LEAD TO COLLAPSE AND MAY CAUSE SERIOUS INJURY.

FAILURE TO FOLLOW THE GUIDELINES ABOVE MAY RESULT IN INJURY AND/OR PROPERTY DAMAGE.

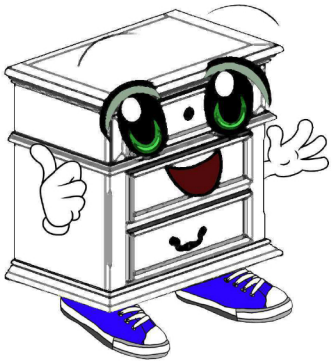

Before you begin, please read Page 2 of "Assembly and Care Advice".

And remember, do not tighten until each step is completed or instructed.

Parts List

- #1 x 1pc Table Top
- #2 x 1pc Leaf
- #3 x 2pcs Mounting Plate
- #4 x 2pcs Base
- #5 x 1pc Cross Bar
- #6 x 4pcs Leg

Hardware List

- #A x 24pcs Bolt Ø5/16" x 1-5/8"
- #B x 2pcs Bolt Ø5/16" x 2"
- #Cx 26pcs Lock Washer Ø5/16"
- #D x 26pcs Flat Washer Ø5/16"x19mm
- #E x 1pc Allen Key M4

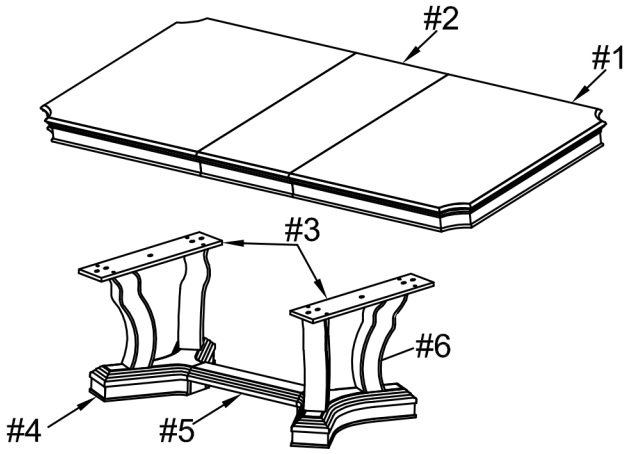

Prepare 4 bolts assembly by inserting lock washer (#C), then flat washer (#D) onto bolts (#A). Align base (#4) to the holes of the legs (#6). Secure by using bolts (#A).

#A x 4PCS
#C x 4PCS
#D x 4PCS

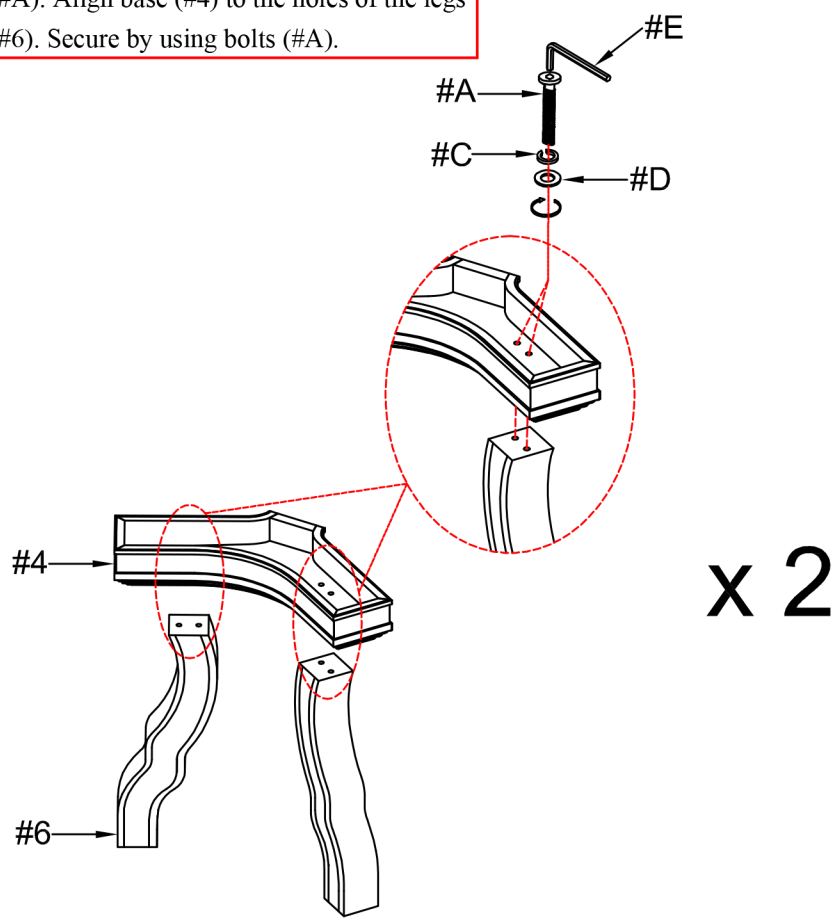

Prepare 4 bolts assembly by inserting lock washer (#C), then flat washer (#D) onto bolts (#A). Align mounting plate (#3) to the holes of the legs (#6). Secure by using bolts (#A).

#A x 4PCS
#C x 4PCS
#D x 4PCS

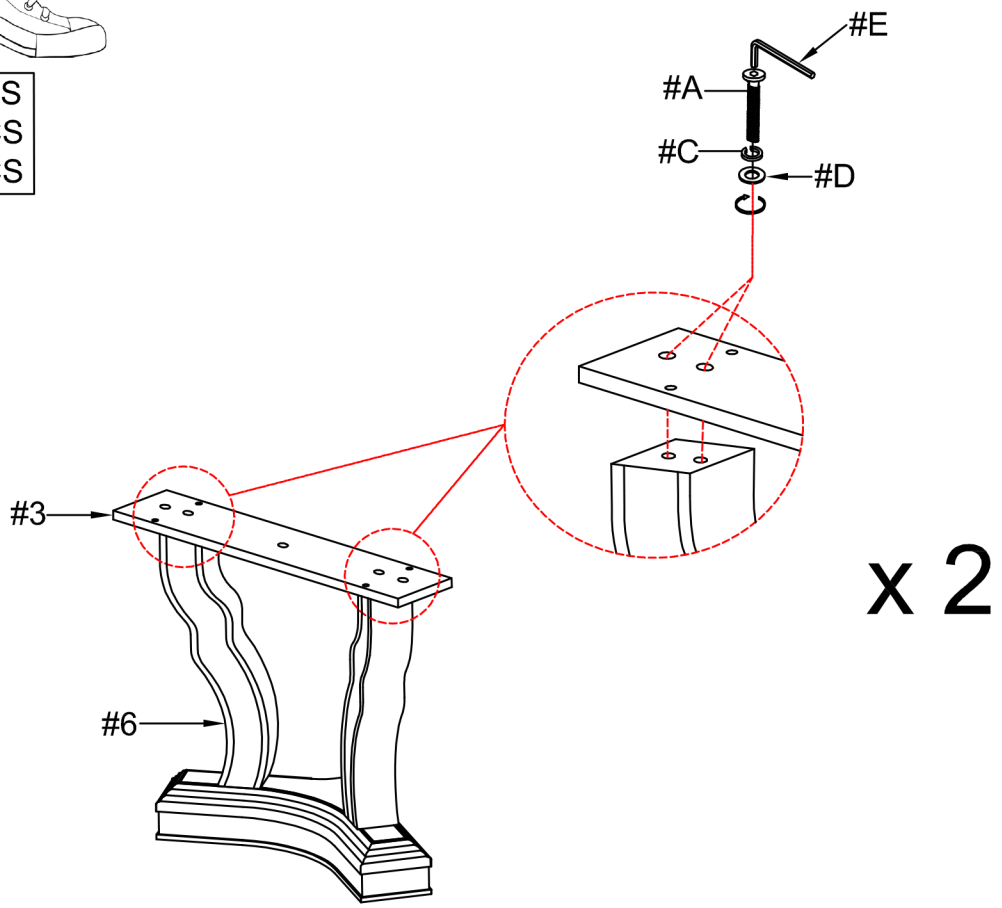

#A x 8PCS
#C x 8PCS
#D x 8PCS

Prepare 8 bolts assembly by inserting lock washer (#C), then flat washer (#D) onto bolts (#A). Align mounting plates (#3) to the holes of the table top (#1). Secure by using bolts (#A).

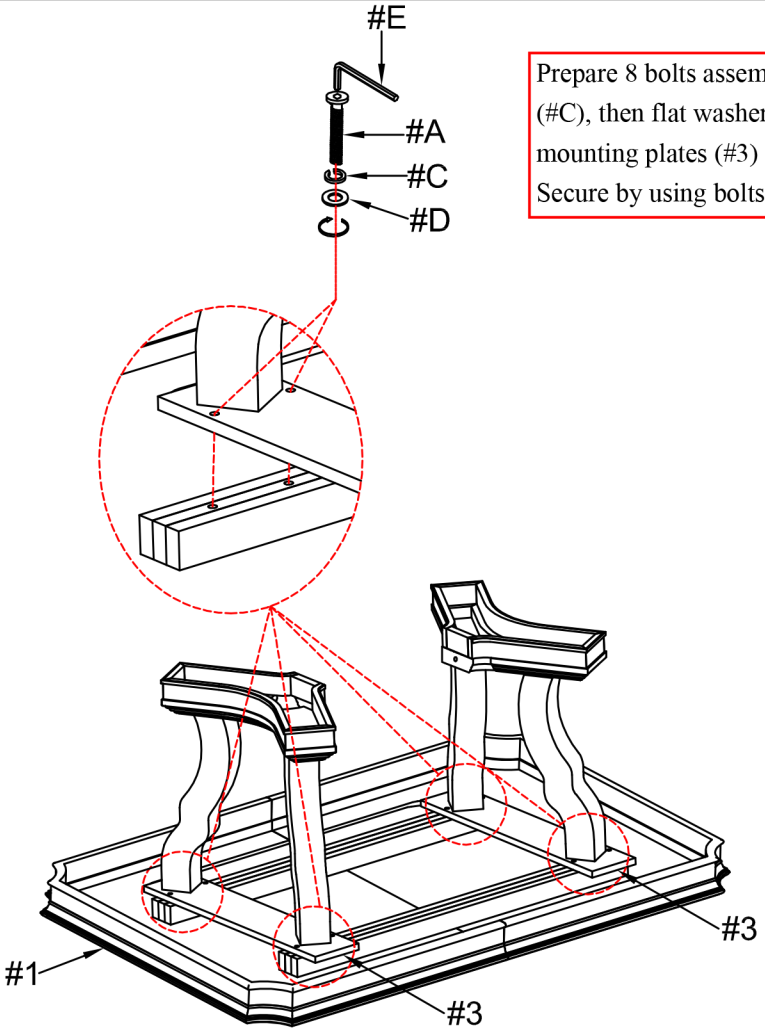

#B x 2PCS
#C x 2PCS
#D x 2PCS

Prepare 2 bolts assembly by inserting lock washer (#C), then flat washer (#D) onto bolts (#B). Align cross bar (#5) to the holes of the base (#4), then secure by using bolts (#B).

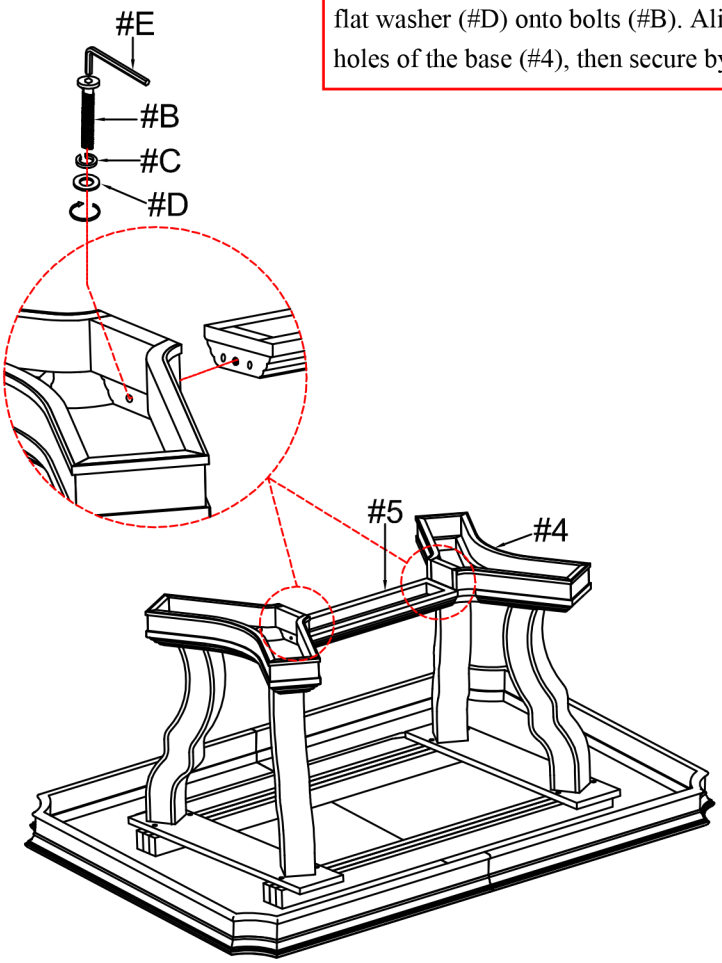

Unlock lever at the bottom of the table (#1), then extend table (#1) to place table leaf (#2) to the middle of the table top (#1).

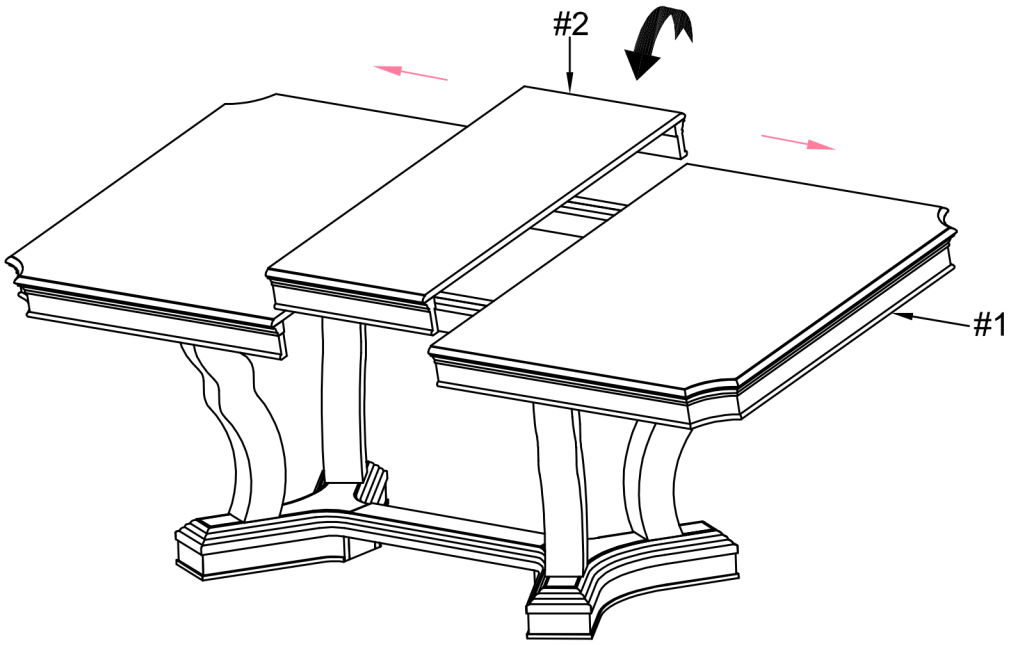

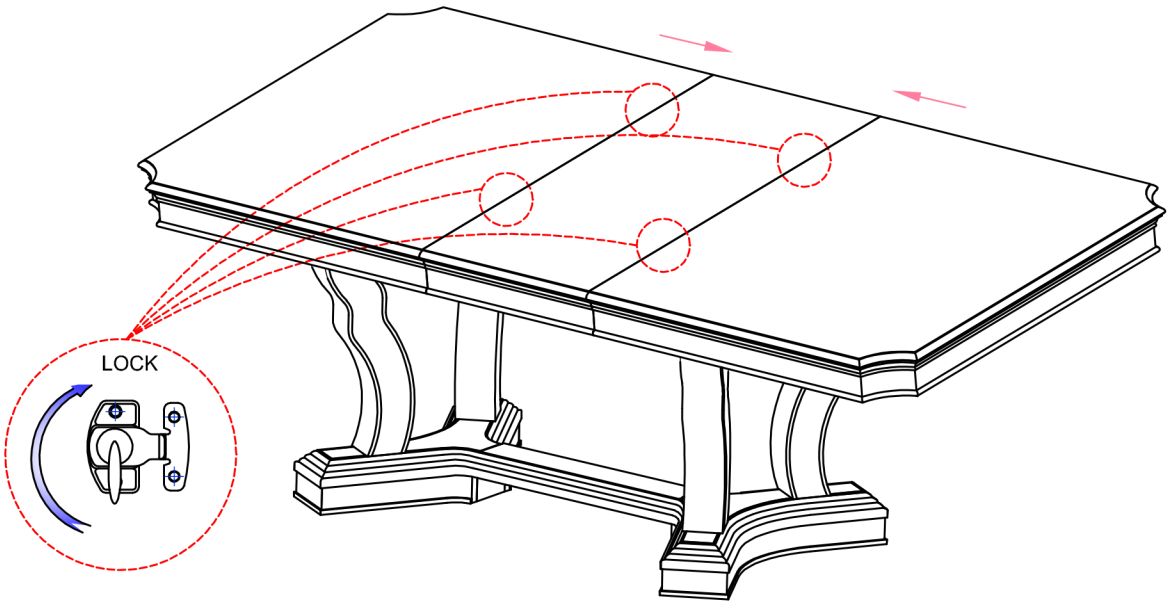

Lock the table leaf to table top.

ASSEMBLY IS COMPLETED